GE Healthcare

Technical Publications

5128706–1–100

Revision 1

SENOGRAPHE DMR+ pim Pre–Installation Manual

do not duplicate

Copyright© 2006 by General Electric Co.

ATTENTION

LES APPAREILS À RAYONS X SONT DANGEREUX À LA FOIS POUR LE PATIENT ET POUR LE MANIPULATEUR SI LES MESURES DE PROTECTION NE SONT PAS STRICTEMENT APPLIQUEES

Bien que cet appareil soit construit selon les normes de sécurité les plus sévères, la source de rayonnement X représente un danger lorsque le manipulateur est non qualifié ou non averti. Une exposition excessive au rayonnement X entraîne des dommages à l'organisme.

Par conséquent, toutes les précautions doivent être prises pour éviter que les personnes non autorisées ou non qualifiées utilisent cet appareil créant ainsi un danger pour les autres et pour elles–mêmes.

Avant chaque manipulation, les personnes qualifiées et autorisées à se servir de cet appareil doivent se renseigner sur les mesures de protection établies par la Commission Internationale de la Protection Radiologique, Annales 26 : Recommandations de la Commission Internationale sur la Protection Radiologique et les normes nationales en vigueur.

WARNING

X–RAY EQUIPMENT IS DANGEROUS TO BOTH PATIENT AND OPERATOR UNLESS MEASURES OF PROTECTION ARE STRICTLY OBSERVED

Though this equipment is built to the highest standards of electrical and mechanical safety, the useful x–ray beam becomes a source of danger in the hands of the unauthorized or unqualified operator. Excessive exposure to x–radiation causes damage to human tissue.

Therefore, adequate precautions must be taken to prevent unauthorized or unqualified persons from operating this equipment or exposing themselves or others to its radiation.

Before operation, persons qualified and authorized to operate this equipment should be familiar with the Recommendations of the International Commission on Radiological Protection, contained in Annals Number 26 of the ICRP, and with applicable national standards.

ATENCION

LOS APARATOS DE RAYOS X SON PELIGROSOS PARA EL PACIENTE Y EL MANIPULADOR CUANDO LAS NORMAS DE PROTECCION NO ESTAN OBSERVADAS

Aunque este aparato está construido según las normas de seguridad más estrictas, la radiación X constituye un peligro al ser manipulado por personas no autorizadas o incompetentes. Una exposición excesiva a la radiación X puede causar daños al organismo.

Por consiguiente, se deberán tomar todas las precauciones necesarias para evitar que las personas incompetentes o no autorizadas utilicen este aparato, lo que sería un peligro para los demás y para sí mismas.

Antes de efectuar las manipulaciones, las personas habilitadas y competentes en el uso de este aparato, deberán informarse sobre las normas de protección fijadas por la Comisión Internacional de la Protección Radiológica, Anales No 26: Recomendaciónes de la Comisión Internacional sobre la Protección Radiológica y normas nacionales.

ACHTUNG

RÖNTGENAPPARATE SIND EINE GEFAHR FÜR PATIENTEN SOWIE BEDIENUNGSPERSONAL, WENN DIE GELTENDEN SICHERHEITSVORKEHRUNGEN NICHT GENAU BEACHTET WERDEN

Dieser Apparat entspricht in seiner Bauweise strengsten elektrischen und mechanischen Sichereitsnormen, doch in den Händen unbefugter oder unqualifizierter Personen wird er zu einer Gefahrenquelle. Übermäßige Röntgenbestrahlung ist für den menschlichen Organismus schädlich.

Deswegen sind hinreichende Vorsichtsmaßnahmen erforderlich, um zu verhindern, daßunbefugte oder unqualifizierte Personen solche Geräte bedienen oder sich selbst und andere Personen deren Bestrahlung aussetzen können.

Vor Inbetriebnahme dieses Apparats sollte sich das qualifizierte und befugte Bedienungspersonal mit den geltenden Kriterien für den gefahrlosen Strahleneinsatz durch sorgfältiges Studium des Hefts Nr. 26 der Internationalen Kommission für Strahlenschutz (ICRP) vertraut machen: Empfehlungen der Internationalen Kommission für Strahlenschutz und anderer nationaler Normenbehörden.

TABLE OF CONTENTS

CHAPTER	TITLE	PAGE
	REVISION HISTORY	v
	LIST OF EFFECTIVE PAGES	v
1	INTRODUCTION	1–1
	SECTION 1 PURPOSE AND SCOPE OF THIS MANUAL	1–3
	SECTION 2 RESPONSIBILITY OF PURCHASER	1–3
	SECTION 3 PRODUCT IDENTIFICATION	1–3
2	ROOM REQUIREMENTS	2–1
	SECTION 1 ENVIRONMENTAL REQUIREMENTS/LIMITATIONS	2–1
	1–1 Room climate	2–1
	1–2 Equipment heat output	2–1
	SECTION 2 STRUCTURAL REQUIREMENTS	2–3
	2–1 Floor mounting	2–3
	2–2 Ceiling/Wall mounting	2–3
	2–3 Minimum room size	2–3
	SECTION 3 ELECTRICAL REQUIREMENTS	2–4
	3–1 Line voltage specifications	2–4
	3–2 Line frequency specifications	2–4
	3–3 kVA load characteristics	2–4
	3–4 Input impedance	2–4
	3–5 Line supply cable	2–5
	3–6 Main circuit breaker	2–5
	3–7 Room distribution	2–5
	SECTION 4 IEC60601-1-2 ELECTROMAGNETIC STANDARDS COMPLIANCE	2–7
	4–1 General	2–7
	4–2 Electromagnetic Emission	2–7
	4–3 Electromagnetic Immunity	2–8
	4–4 Recommended Separation Distances for Portable and Mobile RF Communications Equipment IEC 60601-1-2	2–10

TABLE OF CONTENTS (CONT.)

CHAPTER	TITLE	PAGE
	4–5 Use Limitation	2–10
	4–6 Installation Requirements and Environmental Control	2–10
	4–7 Stacked components & equipment	2–11
	SECTION 5 INSITE CONNECTION	2–12
3	PRODUCT PHYSICAL CHARACTERISTICS	3–1
	SECTION 1 DIMENSIONS	3–3
	SECTION 2 MOUNTING REQUIREMENTS	3–11
	SECTION 3 NOISE	3–11
	SECTION 4 RADIATION SHIELDING	3–11
4	ADDITIONAL PLANNING AIDS	4–1
	SECTION 1 PRODUCT SHIPPING INFORMATION	4–3
	SECTION 2 TOOLS AND TEST EQUIPMENT	4–3
	SECTION 3 INTERCONNECTIONS	4–3

INSTRUCTIONS CONCERNING SAFETY

WARNING

X–RAY EQUIPMENT IS DANGEROUS TO BOTH PATIENT AND OPERATOR UNLESS ESTABLISHED SAFE EXPOSURE FACTORS ARE STRICTLY OBSERVED

Though this apparatus is built to the highest standards of electrical and mechanical safety, the useful x–ray beam becomes a source of danger in the hands of the unauthorized and incompetent operator. Excessive exposure to x–radiation causes damage to human tissue.

Therefore, adequate precaution shall be taken to make it impossible for unauthorized and unqualified persons to operate this equipment or to expose themselves or others to its radiation.

Before operation, those qualified and authorized to operate this apparatus should become familiar with the established safe exposure factors by a careful study of the International Commission of Radiological Protection (ICRP) Annals Number 26: Recommendations of the International Commission on Radiological Protection and other national standard authorities.

Blank page.

REVISION HISTORY

DATE	REFERENCE	REASON FOR CHANGE
November 29, 2004	5128706–100 rev. 1	New release based on document 2270822–100. Added information on compliance with IEC 601–1–2 Edition 2
November 30, 2006	5128706–1–100 rev. 1	New release based on document 5128706–100. Added information on compliance with CCC requirements for the line supply cable in Chapter 2, Section 3.5

LIST OF EFFECTIVE PAGES

PAGE NUMBER	REVISION NUMBER	PAGE NUMBER	REVISION NUMBER	PAGE NUMBER	REVISION NUMBER
Title page	1				
Safety Instruction	1				
i thru vi	1				
1–1 thru 1–6	1				
2–1 thru 2–12	1				
3–1 thru 3–12	1				
4–1 thru 4–4	1				

Blank page.

CHAPTER 1 – INTRODUCTION

ILLUSTRATION **1–1**
SENOGRAPHE BASIC CONFIGURATION

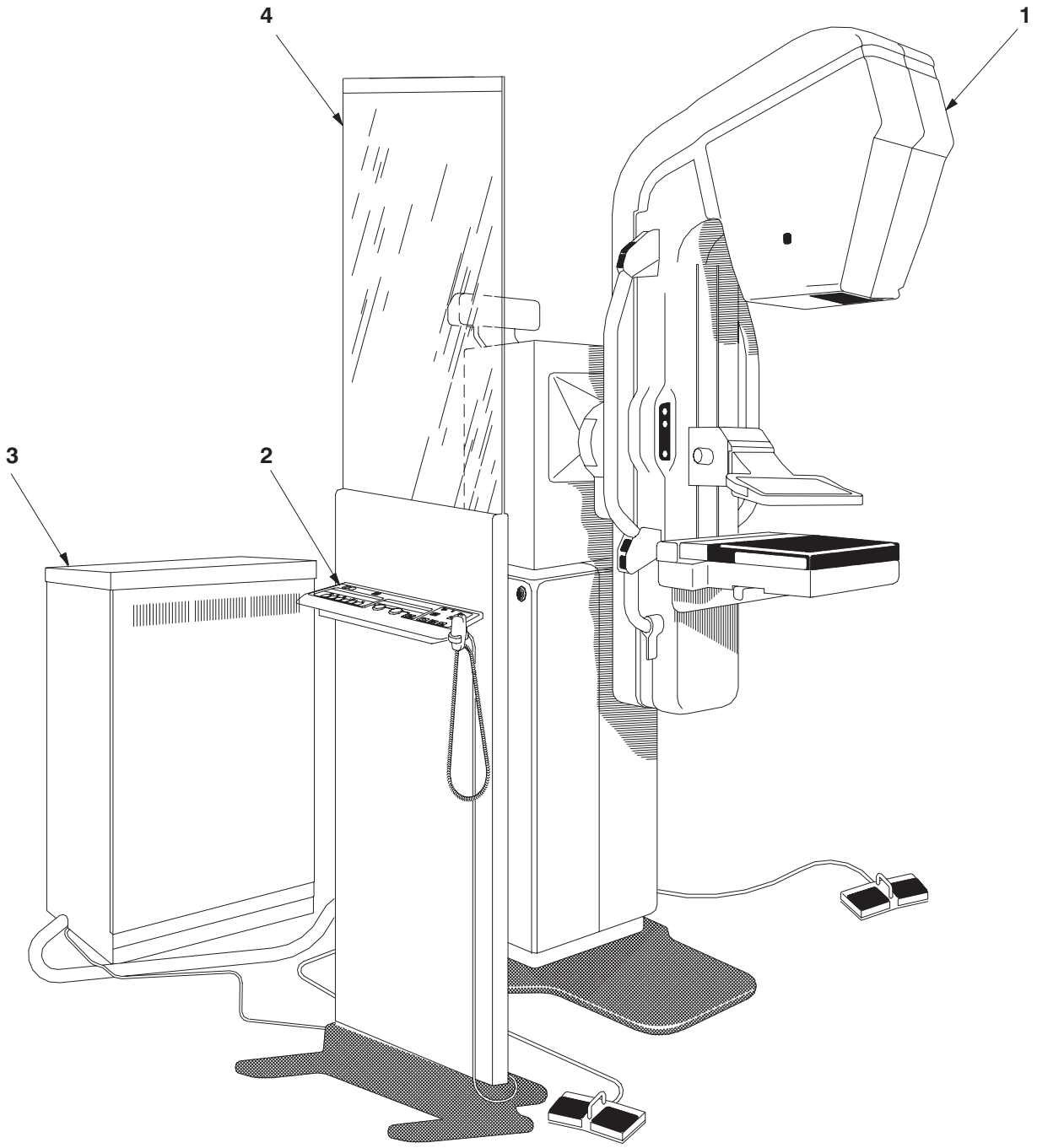

SECTION 1
PURPOSE AND SCOPE OF THIS MANUAL

This planning direction provides pre–installation data for the SENOGRAPHE DMR.

It considers only **product related** pre–installation.

SECTION 2
RESPONSIBILITY OF PURCHASER

SECTION 3
PRODUCT IDENTIFICATION

Components of the SENOGRAPHE DMR covered by this pre–installation manual comprise:

See Illustration 1–1.

- GANTRY (1)
- CONTROL CONSOLE (2)
- GENERATOR (3)
- RAD SHIELD (4)

OPTIONAL EQUIPMENT

- Stereotix 2.
- Accessory storage device.
- 24 x 30 Bucky + COMPRESSION PADDLE.
- Hydraulic chair.
- Rad shield 2 or 3.
- DATAFLASH.

TABLE 1–1
PRODUCT STRUCTURE

PRODUCT COMPLIES WITH THE FOLLOWING REGULATIONS:
IEC601.2.7; UL187; CSA No. 22.114; CRF21 Part 1020.30; and NFC74100. IEC. 801.2; EN 61000–4–2

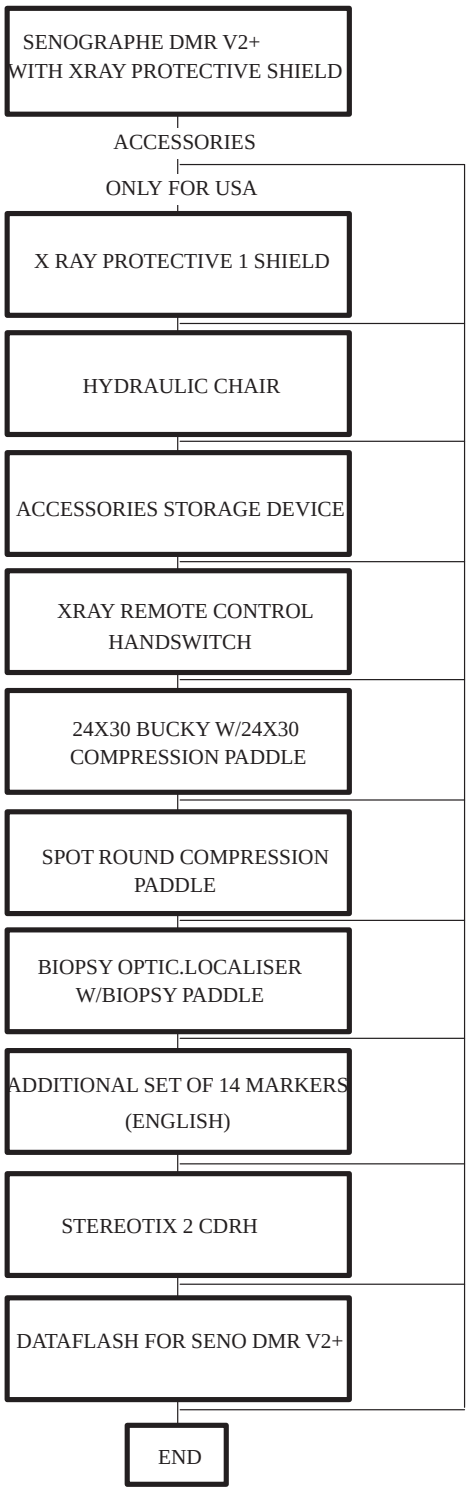

OPTIONAL/ADDITIONAL ACCESSORIES:
ADDITIONAL 24X30 INJECTED COMPRESSION PADDLE
ADDITIONAL 18X24 INJECTED COMPRESSION PADDLE
ADDITIONAL SQUARE SPOT INJECTED COMPRES. PADDLE
ADDITIONAL MANUAL FILM MARKING DEVICE
20M LENGTH CABLE FOR DATAFLASH OPTION

CONSUMABLES:
PLASTIC FOR AXILARY COMPRESSION
PLASTIC FOR SPOT COMPRESSION PADDLE
BOX OF 10 GUIDES 0.9MM F/NEEDLE 0.8MM
BOX OF 10 GUIDES 1.0MM F/NEEDLE 0.9MM
BOX OF 10 GUIDES 1.2MM F/NEEDLE 1.1MM
BOX OF 10 GUIDES 1.3MM F/NEEDLE 1.2MM
BOX OF 10 GUIDES 1.4MM F/NEEDLE 1.3MM
BOX OF 10 GUIDES 1.8MM F/NEEDLE 1.6MM
BOX OF 10 GUIDES 2.25MM F/NEEDLE 2.0MM

Blank page.

CHAPTER 2 – ROOM REQUIREMENTS

SECTION 1
ENVIRONMENTAL REQUIREMENTS/LIMITATIONS

1–1 Room climate

TABLE 2–1
ENVIRONMENTAL REQUIREMENTS/LIMITATIONS

HUMIDITY				TEMPERATURE				ALTITUDE	
In–Use		Storage (equipment packed)		In–Use		Storage (equipment packed)		In–Use	Storage
Min.	Max.	Min.	Max.	Min.	Max.	Min.	Max.		
30%	75%	10%	95%	10˚C *50˚F*	40˚C *104˚F*	– 20˚C *68˚F*	70 ˚C *158˚F*	+3000 m *9842’*	+3000 m *9842’*

1–2 Equipment heat output

IN OPERATION: 1.5 KW (4950 BTU/h) during 5 sec. max.

IN STAND–BY: 500 W (1650 BTU/h).

ILLUSTRATION 2–1
BASIC SYSTEM

Configuration 1

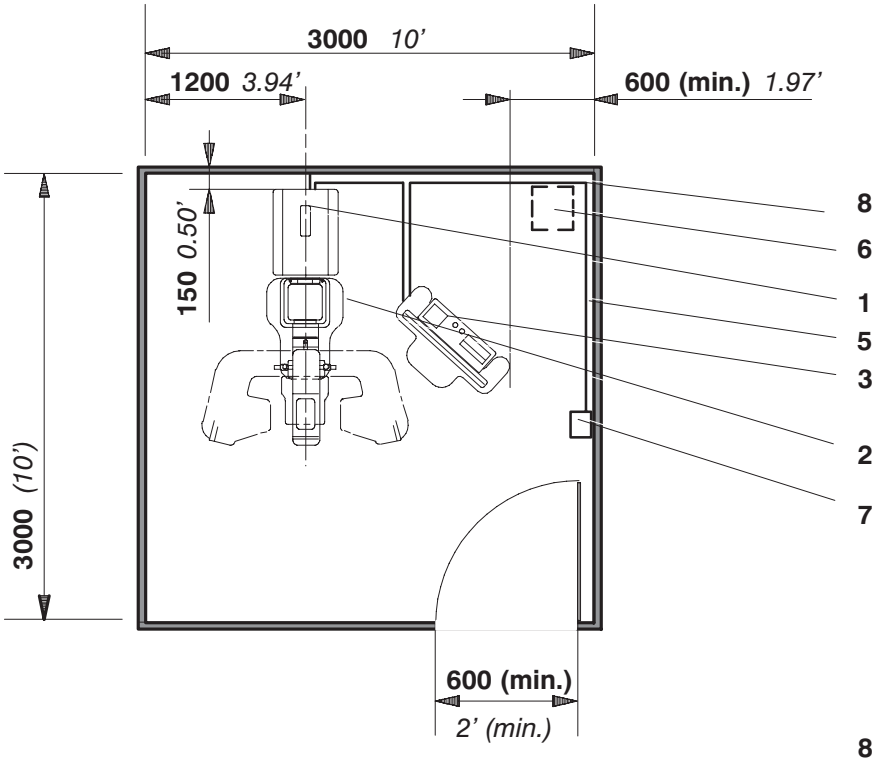

Configuration 2

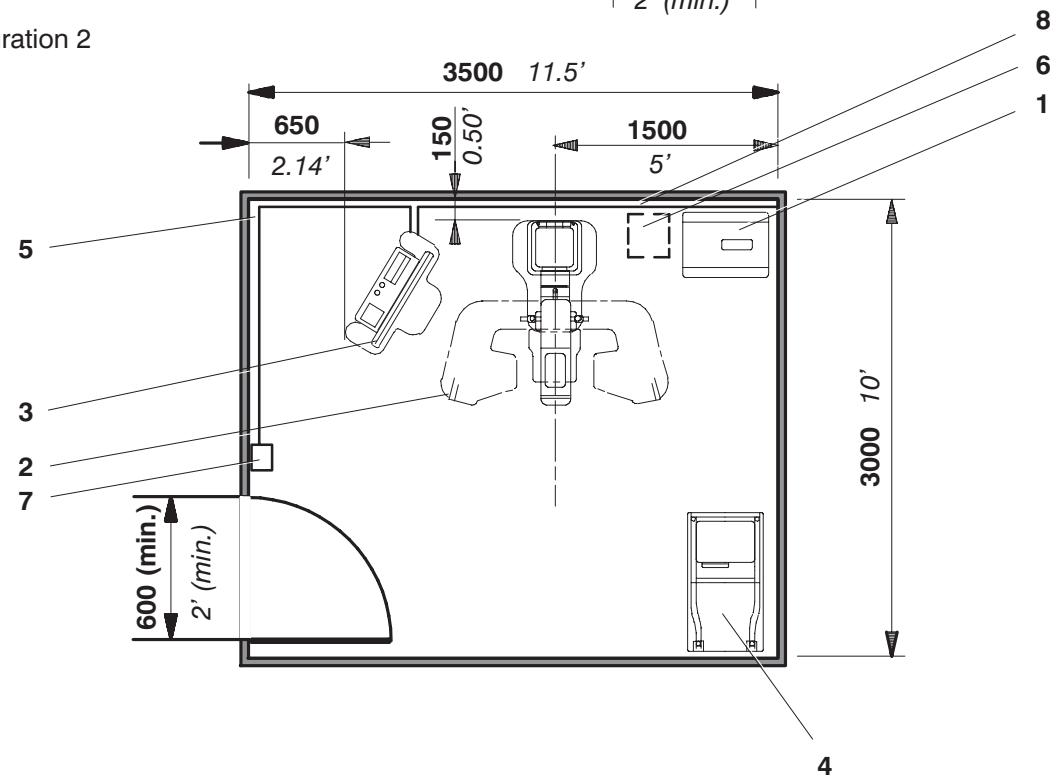

* 600 mm (2'–0") is the absolute minimum access width

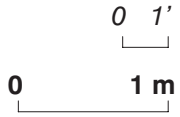

SECTION 2
STRUCTURAL REQUIREMENTS

WARNING

THE GANTRY MUST BE ANCHORED TO THE FLOOR IF STEREOTIX 2 IS USED.

2–1 Floor mounting

The stand column is placed directly om'n the floor. The floor must be stable and flat, and sufficienntly strong to accept the weight and the weight/area defined below without distortion beyond the tolerance given:

The floor surface must remain horizontal and flat within ±2.5 mm per meter (*±1/10 inch in 39 inches*) after installation of the column.

For the stand column only: three anchoring points (see Illustration 3–1, view A).

GEMS provides:

- Three screws 10 dia x 80 mm (*25/64" dia x 3 5/32"*) long. Maximum permissible pull–strength on each bolt: 500 daN (*1102 lbs*).

Inserts for these three screws are supplied by GEMS for concrete slab only (see Illustration 3–1).

- The finished floor of the exam room must be flat and within a good horizontal tolerance.

2–2 Ceiling/Wall mounting

None.

2–3 Minimum room size

See Illustration 2–1.

1. Generator.
2. Gantry (column).
3. Control console with rad shield screen.
4. Accessories storage device (option).
5. Wall duct (customer supply).
   All interconnecting cables must be protected in a cable housing or ducting, except the STEREOTIX positioner cable (which requires to be moved).
6. Power Distribution Board (supplied by Customer).
7. Phone outlet.

SECTION 3
ELECTRICAL REQUIREMENTS

3–1 Line voltage specifications

- Single–phase input voltage:
  - 200/208/220/240/380/415 V (±10%).

3–2 Line frequency specifications

- 50 or 60 Hz (±1 Hz).

3–3 kVA load characteristics

- 8.5 kVA for exposures up to 4.5 s.
  7.5 kVA during 10 s.
- Power factor: 0.61.

3–4 Input impedance

Line impedance at maximum workload: 3.5%.

Line impedances under single–phase installation:

- R_l = total line resistance (two−wire) of the circuit,
- R_l 380 = line resistance equivalent to R_l, reduced to 380 V (input voltage),
- U = local input voltage

$R_l 380 = R_l \times (380/U)^2$

- Typical value: $R_l 380 \leq 1.2\ \Omega$ at P max = 8.5 kVA.

Note: **<u>ONLY for GEMSE:</u>** the Generic EDM is associated with an external modem (Motorola 3265) mounted on the EDM cabinet.
For GEMS A and GEMS AM the Generic EDM incorporates a modem board inside the EDM cabinet. The optional STEREOTIX 2 is supplied through the SENOGRAPHE DMR gantry (Nominal voltage = 27 V DC).

3–5 Line supply cable

The line supply cable comprises of two supply wires and a ground cable (i.e. 3 x AWG 10 (5.32 mm^2)) with the following actual/usable lengths:

- Total length = 7 m (*23*'),
- Usable length = 6.5 m (*21'–4"*).

ILLUSTRATION 2–2
LINE SUPPLY CABLE

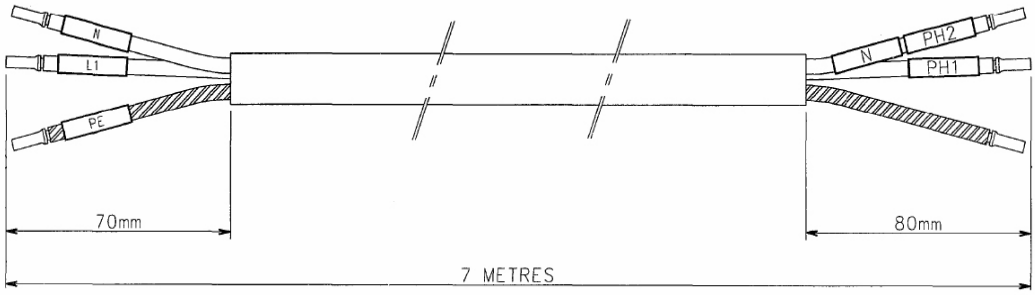

3–5–1 Obtaining a line supply cable

- For customers in all countries except China, the optional line supply cable (S30331BC) must be ordered from the Price Book so that it is supplied with the Senographe System.

- For customers in China, the optional line supply cable from GEMS must **not** be ordered. Instead Chinese customers must locally order an equivalent CCC-certified supply cable from their local electrical supplier.

3–6 Main circuit breaker

Note: **ONLY for GEMSE:** the Generic EDM is associated with an external modem (Motorola 3265) mounted on the EDM cabinet.
For GEMS A and GEMS AM the Generic EDM incorporates a modem board inside the EDM cabinet. The main circuit breaker is supplied by the customer and must be sized in accordance with local regulations.

Circuit breakers sizes for European market:

- From 380 V up to 415 V: circuit breaker: In = 15 A – magnetic I = 7 In ±20%,
- From 200 V up to 240 V: circuit breaker: In = 20 A – magnetic I = 7 In ±20%.

Circuit breakers size and supply conductors for US market: refer to Section 517–71(a) and Section 517–73(a) (Item 1, 2) of the NEC–1993 (see below).

- The branch circuit used must be rated 30 A or less.

- NEC 1993 Section 517–73 (a) Item 1:
  The ampacity of supply branch circuit conductors and the current rating of overcurrent protective devices shall not be less than 50 percent of the momentory rating or 100 percent of the long-time rating, whichever is greater.
- NEC 1993 Section 517–73 (a) Item 2:
  The ampacity of supply feeders and the current rating of overcurrent protective devices supplying two or more branch circuits supplying x-ray units shall not be less than 50 percent of the momentary demand rating of the largest unit plus 25 percent of the momentary demand rating of the next largest unit plus 10 percent of the momentary demand rating of each additional unit. Where simultaneous biplane examinations are undertaken with the x-ray units, the supply conductors and overcurrent protective devices shall be 100 percent of the momentary demand rating of each x-ray unit.

3–7 Room distribution

The senographe DMR provides a room distribution from the generator cabinet (using the dedicated board 200PL4).

- Senographe ON lamp: relay rating is 8A @ 250V AC or 5A @ 30V DC
- X–Ray ON lamp: relay rating is 8A @ 250V AC or 5A @ 30V DC
- Room door switch: relay coil must be supplied with 24V AC

Note: **ONLY for GEMSE:** the Generic EDM is associated with an external modem (Motorola 3265) mounted on the EDM cabinet.
For GEMS A and GEMS AM the Generic EDM incorporates a modem board inside the EDM cabinet. All hardware outside the generator cabinet is customer−supplied.The wire path inside the generator is identical to the feeder wire path.

SECTION 4
IEC60601-1-2 ELECTROMAGNETIC STANDARDS COMPLIANCE

4–1 General

This equipment complies with the IEC60601-1-2 Edition 2 EMC standard for medical devices.

The Senographe Equipment or System is suitable for use in electromagnetic environments as defined in the limits and recommendations given in the following tables:

- Emission Compliance level and limits (Table 2–1).
- Immunity Compliance levels and recommendations for ensuring that the equipment retains its clinical utility (Tables 2–2, 2–3 and 2–4).

Note: This equipment complies with the above EMC standard when used with cables supplied by the manufacturer up to the maximum lengths permitted by the system design specifications.

4–2 Electromagnetic Emission

The Senographe is suitable for use in the specified electromagnetic environment. The purchaser or user of the Senographe should assure that it is used in an electromagnetic environment as described below:

TABLE 2–1
ELECTROMAGNETIC EMISSION

Emissions Test	Compliance	Electromagnetic Environment
Radio-Frequency Emissions CISPR11	Group1 Class A limits	The Senographe is primarily intended for use in non-domestic environments, and not connected directly to the public mains supply network. It is primarily intended for use in environments (such as hospitals) with a dedicated supply system, and in an X-ray shielded room.
	Group1 Class A limits	The Senographe uses RF energy only for its internal function. The RF emission is therefore very low, and not likely to cause any interference in nearby electronic equipment.
Harmonic emissions IEC 61000-3-2	Not applicable	The Senographe is primarily intended for use in non-domestic environments, and not connected directly to the public mains supply network.
Voltage fluctuations/ flicker emissions IEC 61000-3-3	Not applicable	The Senographe is primarily intended for use in non-domestic environments, and not connected directly to the public mains supply network.

4–3 Electromagnetic Immunity

The Senographe is suitable for use in the specified electromagnetic environment. The purchaser or user of the Senographe should ensure that it is used in an electromagnetic environment as described below:

TABLE 2–2
ELECTROMAGNETIC IMMUNITY –PART 1

Immunity Test	IEC 60601-1-2 Test Level	Compliance Level	Electromagnetic Environment
Electrostatic discharge (ESD) IEC 61000-4-2	6 kV contact 8 kV air	6 kV contact 8 kV air	Floors are wood, concrete, or ceramic tiles, or floors are covered with synthetic material and the relative humidity is at least 30 percent.
Electrical fast transient/burst IEC 61000-4-4	2 kV for power supply lines 1 kV for input/output lines	2 kV for power supply lines 1 kV for input/output lines	Mains power quality is that of a typical commercial and/or hospital environment
Surge IEC 61000-4-5	1 kV differential mode 2 kV common mode	1 kV differential mode 2 kV common mode	Mains power quality is that of a typical commercial and/or hospital environment.
Voltage dips, short interruptions and voltage variations on power supply input lines IEC 61000-4-11	0% U_n for 5 sec	0% U_n for 5 sec	Mains power quality is that of a typical commercial and/or hospital environment. If the user of the Senographe requires continued operation during mains power interruptions, it is recommended that the Senographe be powered from an uninterruptible power supply or a battery.
Power frequency (50/60 Hz) magnetic field IEC 61000-4-8	3 A/m	3 A/m 1A/m	Power frequency magnetic fields are at levels characteristic of a typical location in a typical commercial and/or hospital environment. At this disturbance level the monitor image may present some slight flicker. If this occurs, the monitor may be removed from the vicinity of the low frequency magnetic field source to improve image quality. At this disturbance level the system is fully operational.

Note: These are guidelines. Actual conditions may vary.

TABLE 2–3
ELECTROMAGNETIC IMMUNITY –PART 2

Immunity Test	IEC 60601-1-2 Test Level	Compliance Level	Electromagnetic Environment
Conducted RF IEC 61000-4-6	3 V 150 kHz to 80 MHz	[$V_{1=}$] 3 V	At this disturbance level the monitor image may present some slight flicker. If this occurs, the monitor may be removed from the vicinity of the electrical field source to improve image quality.
		[$V_{2=}$] 0.3 V	At this disturbance level the system is fully operational.
Radiated RF IEC 61000-4-3	3 V/m 80 kHz to 800 MHz	[$E_{1=}$] 3 V/m	At this disturbance level the monitor image may present some slight flicker. If this occurs, the monitor may be removed from the vicinity of the electrical field source to improve image quality.
		[$E_{2=}$] 0.3 V/m	At this disturbance level the system is fully operational.
	3 V/m 800 MHz to 2,5 GHz	[$E_{3=}$] 3 V/m	At this disturbance level the monitor image may present some slight flicker. If this occurs, the monitor may be removed from the vicinity of the electrical field source to improve image quality.
		[$E_{4=}$] 0.3 V/m	At this disturbance level the system is fully operational.

- Field strengths from fixed RF transmitters must be less than the compliance level in each frequency range. At frequencies between 150 kHz to 80 MHz, field strengths must be less than [V2] V/m.
- **Note:**
  Field strengths from fixed transmitters, such as base stations for cellular telephones and land mobile radios, amateur radio, AM and FM radio broadcast, and TV broadcast cannot be estimated accurately. To assess the electromagnetic environment due to fixed RF transmitters, an electromagnetic site survey should be performed. If the measured field strength exceeds the RF compliance level above, monitor the Senographe to verify normal operation in each use location. If abnormal performance is observed, additional measures may be necessary, such as re-orienting or relocating the Senographe.
- Interference may occur in the vicinity of equipment marked with the following symbol:

  .
- No portable or mobile RF communications equipment may be used closer to any part of the Senographe, including cables, than the recommended separation distance calculated from the equation appropriate to the frequency of the transmitter. See Table 2–4.

Note: These are guidelines. Actual conditions may vary .

4–4 Recommended Separation Distances for Portable and Mobile RF Communications Equipment IEC 60601-1-2

TABLE 2–4
RECOMMENDED SEPARATION DISTANCES

Frequency of Transmitter **Equation**	**150KHz to 26 MHz** $d = (3.5/V_2).\sqrt{P}$	**26 MHz to 80 MHz** $d = (3.5/V_2).\sqrt{P}$	**80 MHz to 800 MHz** $d = (3.5/E_2).\sqrt{P}$	**800 MHz to 2.5 GHz** $d = (7/E_4).\sqrt{P}$
Rated Power of Transmitter (watts)	**DISTANCE (meters)**	**DISTANCE (meters)**	**DISTANCE (meters)**	**DISTANCE (meters)**
10 mW	1.2	1.2	1.2	2.3
100 mW	3.8	3.8	3.8	7.3
1	12	12	12	23(*)
10	38	38	38	73
100	120	120	120	230

- For transmitters rated at a power not listed above, the recommended separation distance (*d*, in meters) can be estimated using the equation in the corresponding column, where *P* is the power rating of the transmitter in watts (W) according to the transmitter manufacturer.
- (*) For example, a 1 W mobile phone (800MHz to 2.5GHz carrier frequency) should be no closer than 23 meters from the Senographe to avoid image interference risks.
- Using the recommended distance as determined from Table 4, between 150KHz & 2.5GHz, some slight disturbance might be observed at image level. The disturbance to the image cannot be confused with a medical pathology, and the equipment retains its medical utility.

Note: These are guidelines. Actual conditions may vary.

4–5 Use Limitation

- External components:

  The use of accessories, transducers, and cables other than those specified may result in degraded Electromagnetic compatibility of the Senographe.

4–6 Installation Requirements and Environmental Control

- In order to minimize interference risks, the following requirements apply.

4–6–1 Cable shielding & grounding

- All interconnecting cables to peripheral devices must be shielded and properly grounded. Use of cables not properly shielded and grounded may result in the equipment causing radio frequency interference.

4–6–2 Separated power supply distribution panel & line

- This product complies with the radiated emission limits of the CISPR11 Group1 Class A standard.

- The Senographe is primarily intended for use in non–domestic environments, and not connected directly to the public mains supply network.

  It is primarily intended for use in environments (such as hospitals) with a dedicated supply system, and in an X–ray shielded room.

- To avoid interference in the event that the Senographe is used in a domestic environment (in a doctor's office, for example), it is recommended that it should be connected to a separate AC power distribution panel and line, and it must be installed in an X–ray shielded room.

4–6–3 Subsystem & accessories Power supply distribution

- All components, accessories, subsystems, and systems which are electrically connected to the Senographe must have AC power supplied by the same power distribution panel and line.

Note: – We can not connect together different electrical devices and supply them by different AC power distribution lines.
– In order to avoid interference, all components and accessories connected to the Senographe must be connected to the same AC power distribution panel, which is itself supplied by a single power line.

4–7 Stacked components & equipment

- The Senographe should not be used adjacent to or stacked with other equipment. If adjacent or stacked use is necessary, the Senographe should be monitored to verify normal operation in the configuration in which it will be used.

4–7–1 Low frequency magnetic field

- In the case of a digital Senographe, the Gantry (with its digital detector) must be separated by at least 1 meter from the generator cabinet, and 1 meter from the analog (CRT) monitors. These specified distances minimize the risk of low frequency magnetic field interference.

4–7–2 Static magnetic field limits

- In order to avoid interference on the Senographe system, static field limits from the surrounding environment are specified.
- Static field is specified as less than 1 Gauss in the Examination room (Gantry room), and in the Control Area (for all Subsystems).
- Static field is specified as less than 3 Gauss in the Technical Room.

4–7–3 Electrostatic discharge environment & recommendations

- In order to reduce electrostatic discharge interference, a charge dissipative floor should be installed to prevent charge accumulation.
- The dissipative floor material must be connected to the system reference ground, if applicable.

SECTION 5
INSITE CONNECTION

The Senographe DMR will use the Generic EDM (Equipment Diagnostic Monitor) when it is available (1st quarter 1996). The Generic EDM is supplied as a Service option, in a separate cabinet. The Generic EDM can be installed on a shelf or anchored to the wall using an installation kit. The Generic EDM will be preferably installed close to the DMR generator cabinet but as the Generic EDM can monitor several systems at the same time, it can also be placed in another room. See Generic EDM manual for additional details.
The Generic EDM cabinet has the size of a mini–tower PC:
Height x Lenght x Width = 350 x 430 x 170 in mm = 14 x 17 x 7 in inches.
A dedicated phone line with a local socket used only for the connection to a modem will preferably be located close to the EDM cabinet. The Generic EDM is supplied with 220V AC exclusively. This supply must be as permanent as possible (e.g. not switchable with the main circuit braker of the DMR).

Note: **ONLY for GEMSE:** the Generic EDM is associated with an external modem (Motorola 3265) mounted on the EDM cabinet.
For GEMS A and GEMS AM the Generic EDM incorporates a modem board inside the EDM cabinet.

CHAPTER 3 – PRODUCT PHYSICAL CHARACTERISTICS

ILLUSTRATION 3–1
GANTRY DIMENSIONAL

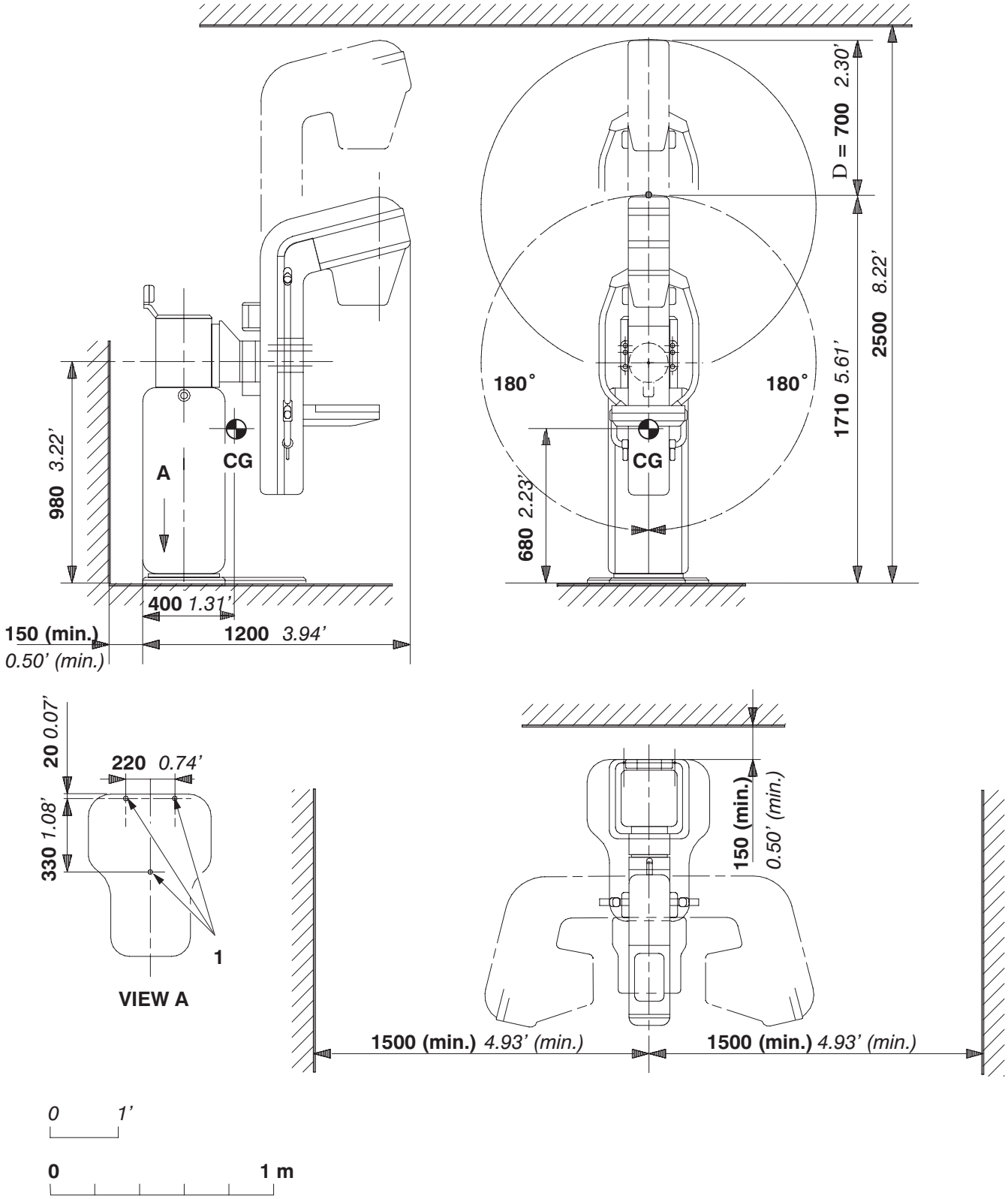

SECTION 1
DIMENSIONS

TABLE 3–1
PRODUCT PHYSICAL CHARACTERISTICS

PRODUCT/ COMPONENT	DIMENSIONS						WEIGHT		ILLUSTRATION
	Length mm (*feet*)		Width mm (*feet*)		Height mm (*feet*)		kg (*pounds*)		
Gantry	1200	(*3.94'*)	540	(*1.77'*)	1710/2410	(*5.61/7.91'*)	280	(*617.3*)	3–1
Console	550	(*1.81'*)	180	(*0.59'*)	85	(*0.28'*)	3	(*6.6*)	–
Generator cabinet	562	(*1.84'*)	431	(*1.41'*)	917	(*3.01'*)	105	(*231.5*)	3–2
Rad shield screen + console	700	(*2.29'*)	490	(*1.60'*)	2200	(*7.21'*)	90	(*155*)	3–3
Accessories storage device	900	(*2.95'*)	500	(*1.61'*)	890	(*2.92'*)	50	(*110.2*)	3–7
Stereotix 2 positioner	345	(*1.13'*)	430	(*1.43'*)	295	(*0.97'*)	8	(*17.4*)	3–7
Stereotix 2 console	480	(*1.58'*)	380	(*1.25'*)	210	(*0.69'*)	6	(*13.2*)	3–7
DATAFLASH option	400	*(1.31')*	330	*(1.08')*	395	*(1.29')*	11.4	*(25.1)*	3–8

Gantry Dimensional (see Illustration 3–1)

(1) Three anchoring points, GEMS provides three 10–mm dia screws with three Hilti HDE M10 for use in concrete slab construction only (For HDE M10 bolts, drill a 62–mm deep 18–mm dia hole).

Anchoring components for other floor construction types must be supplied locally.

ILLUSTRATION 3–2
GENERATOR DIMENSIONAL

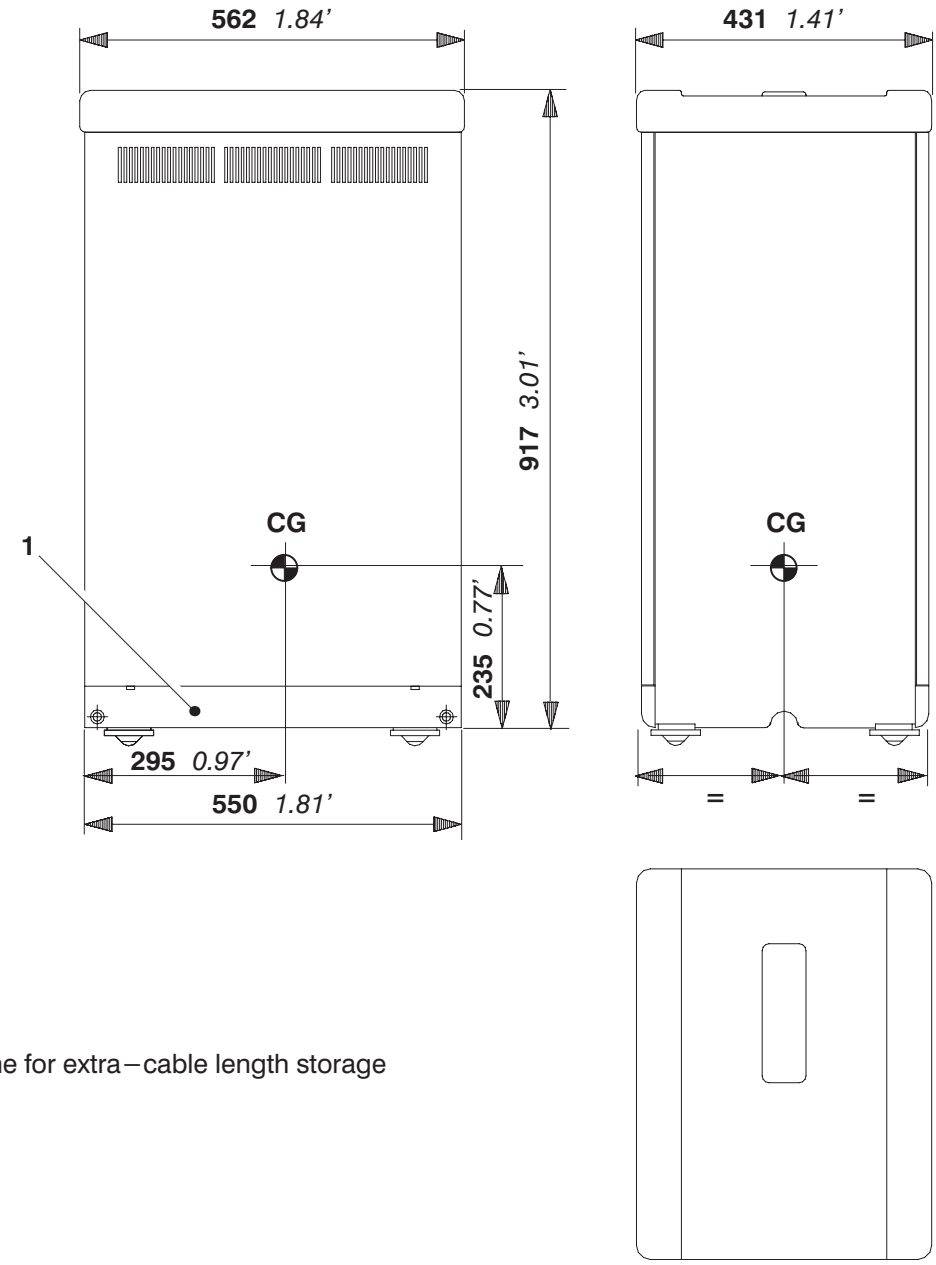

1. Free volume for extra–cable length storage

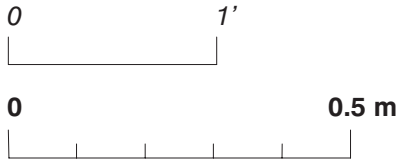

ILLUSTRATION 3−3
DIMENSIONS OF RAD SHIELD SCREEN WITH CONTROL CONSOLE

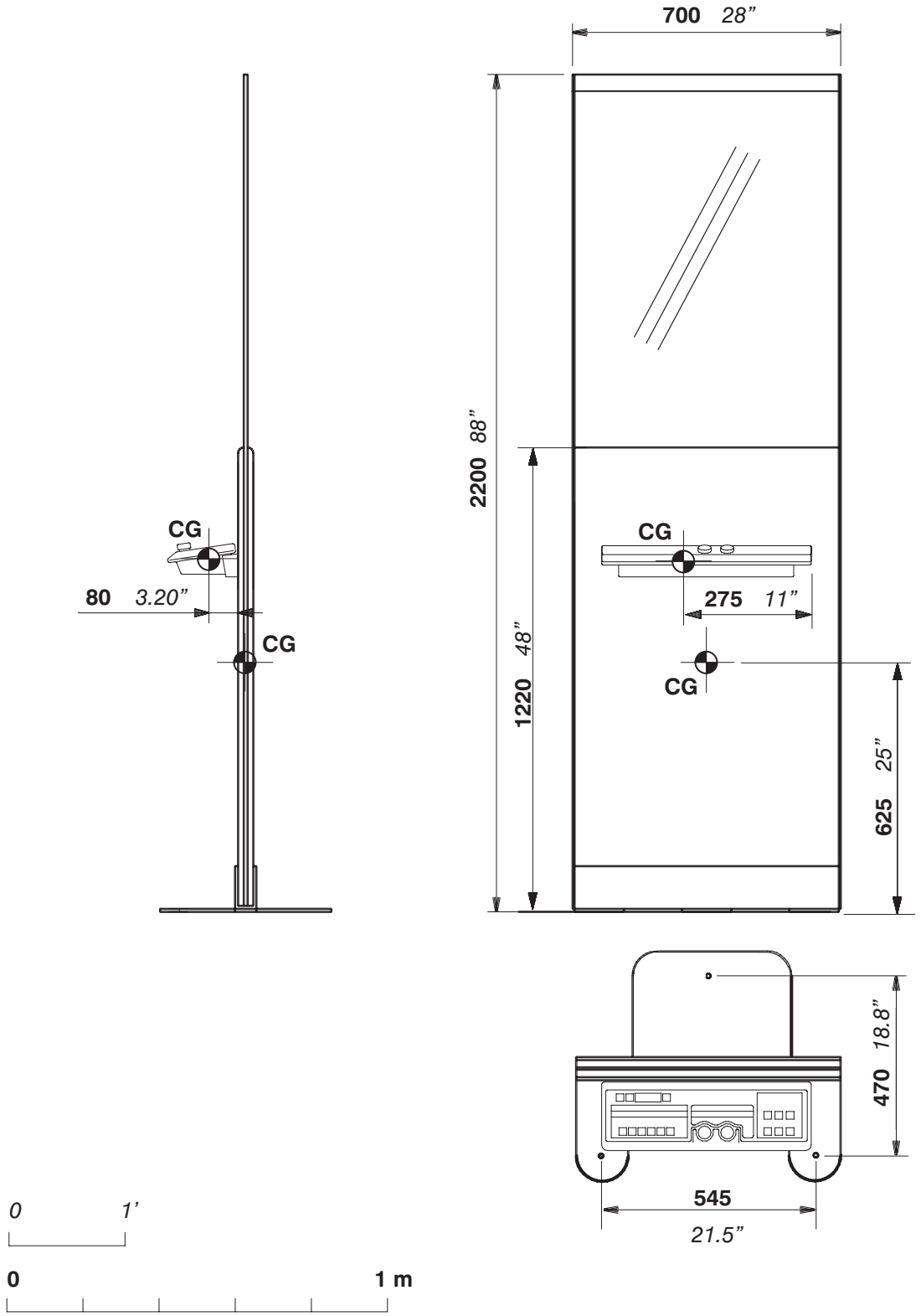

ILLUSTRATION 3–4
DIMENSIONS OF OPTIONAL SCREEN

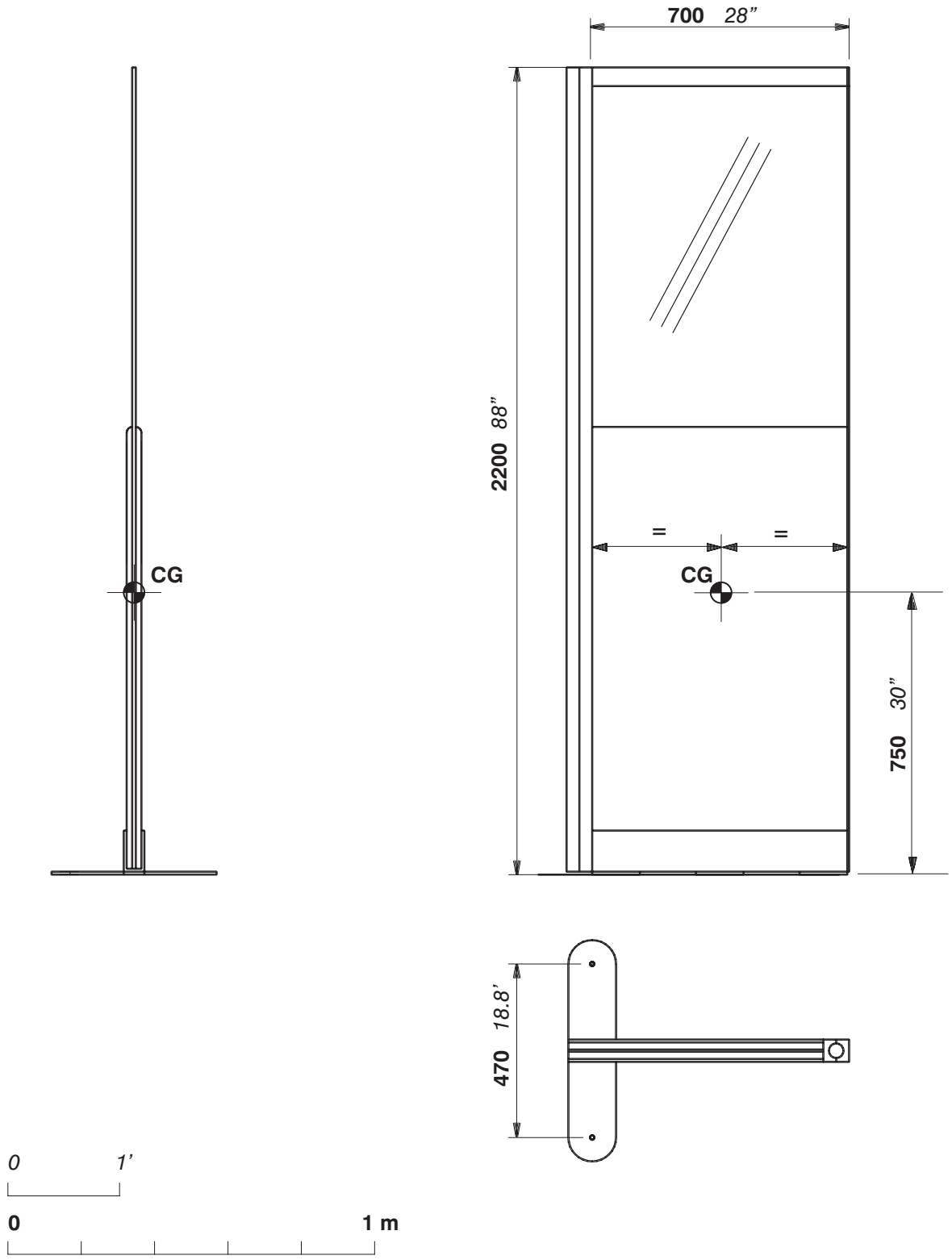

Prod. Physical Carac.

ILLUSTRATION 3−5
DIMENSIONS OF RAD SHIELD SREEN AND OPTIONAL SCREEN

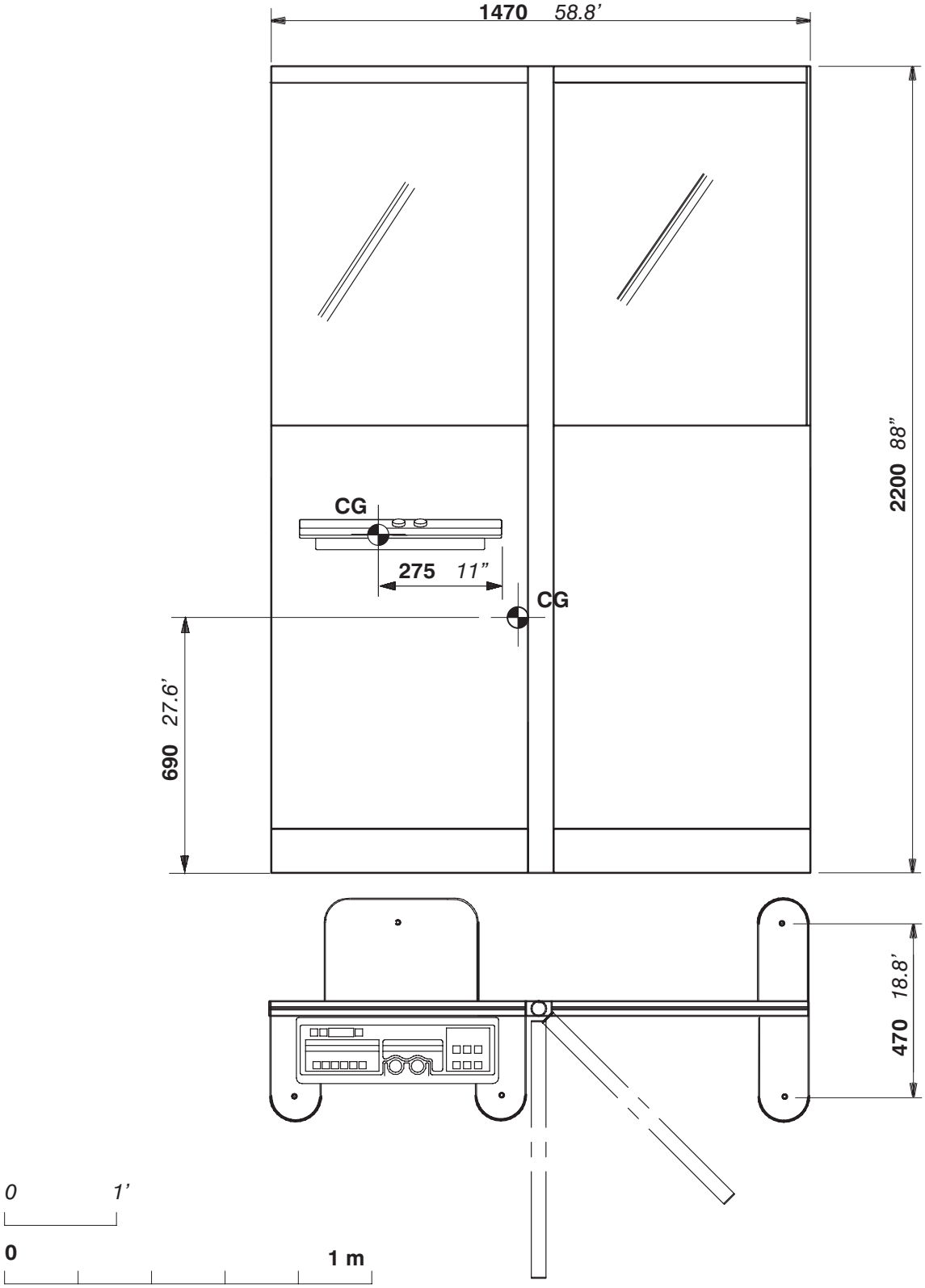

ILLUSTRATION 3–6
DIMENSIONS OF RAD SHIELD SCREEN AND TWO OPTIONAL SCREENS

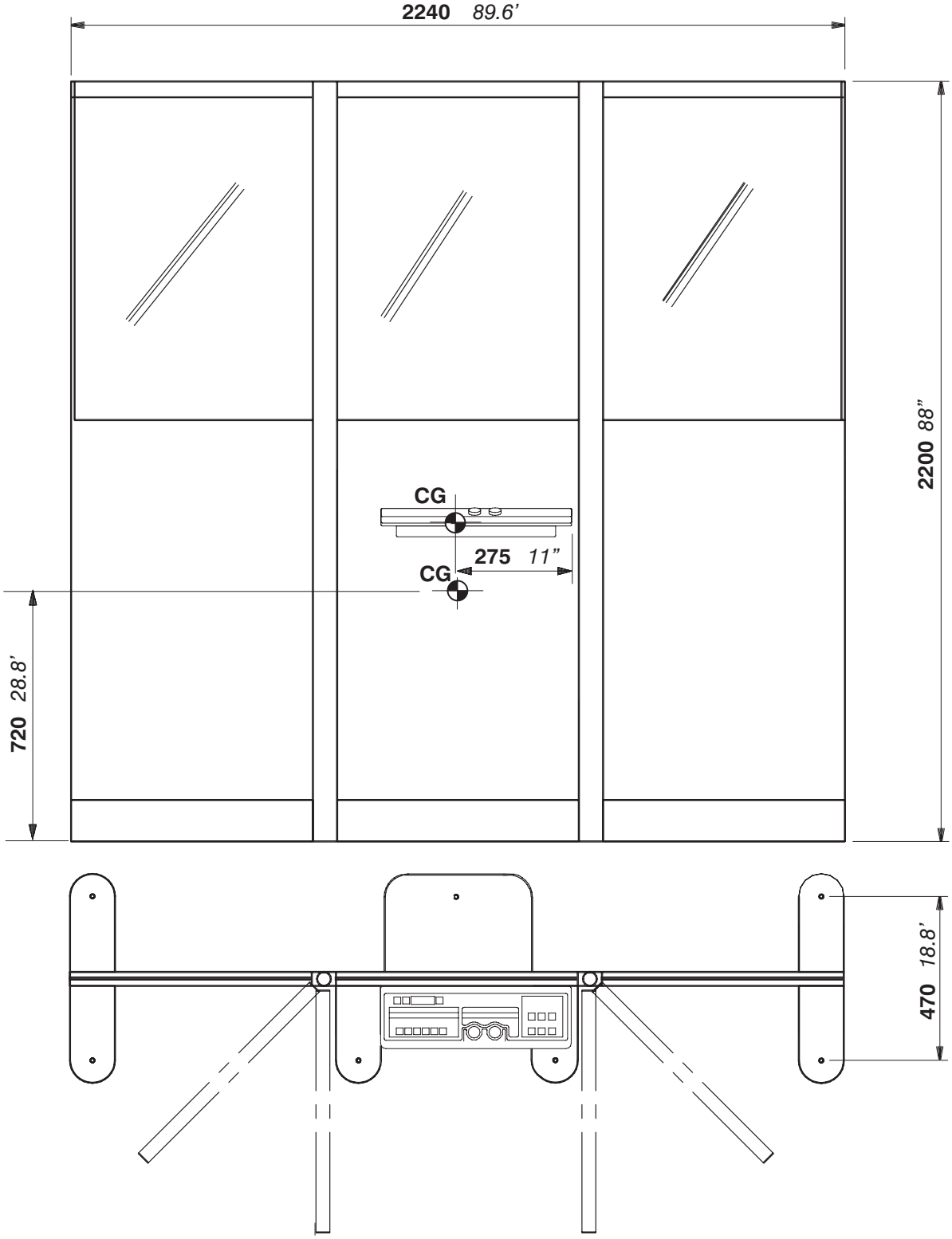

ILLUSTRATION 3–7
DIMENSIONS OF ACCESSORIES STORAGE DEVICE

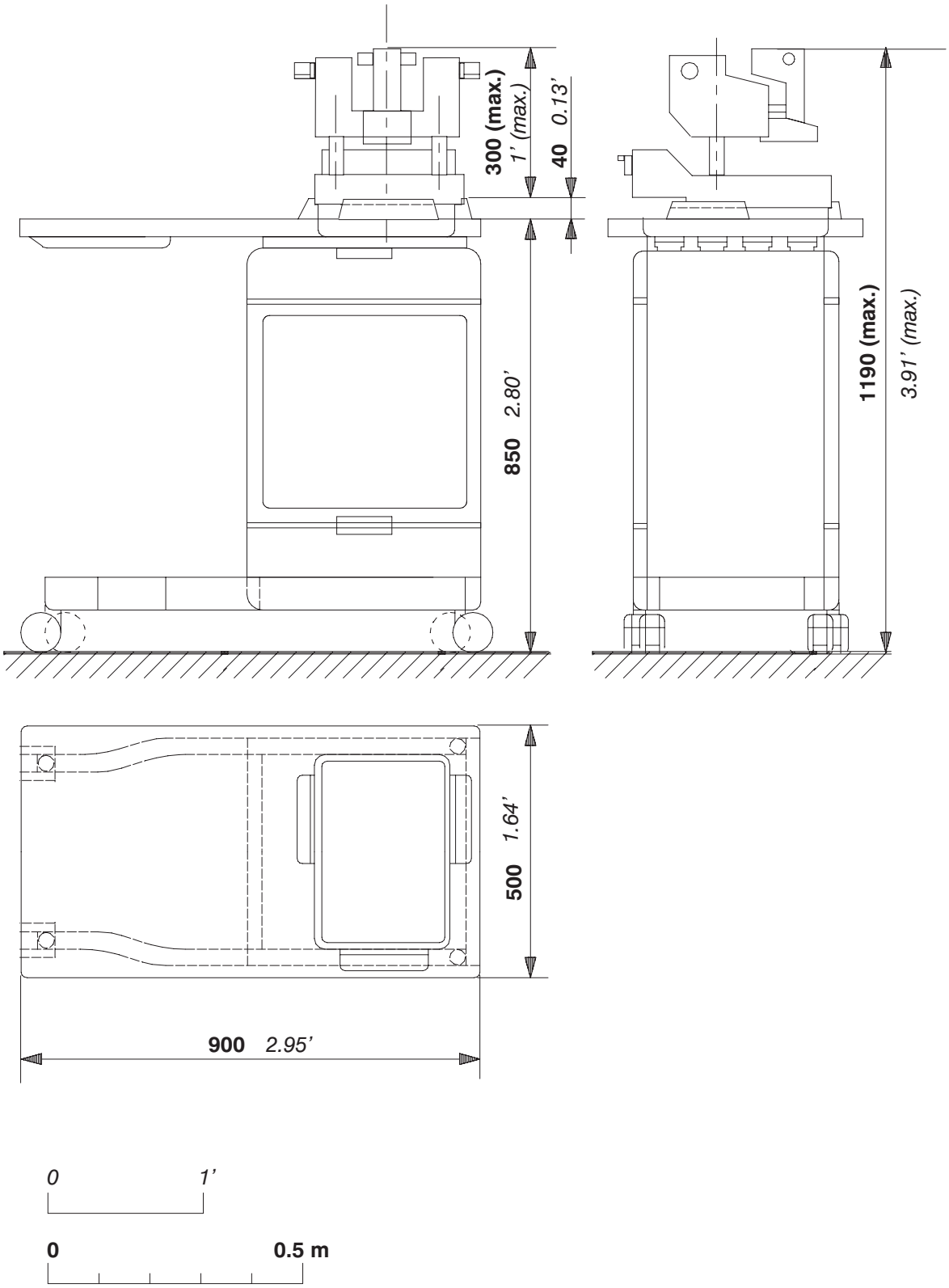

ILLUSTRATION 3–8
DATAFLASH DIMENSIONS

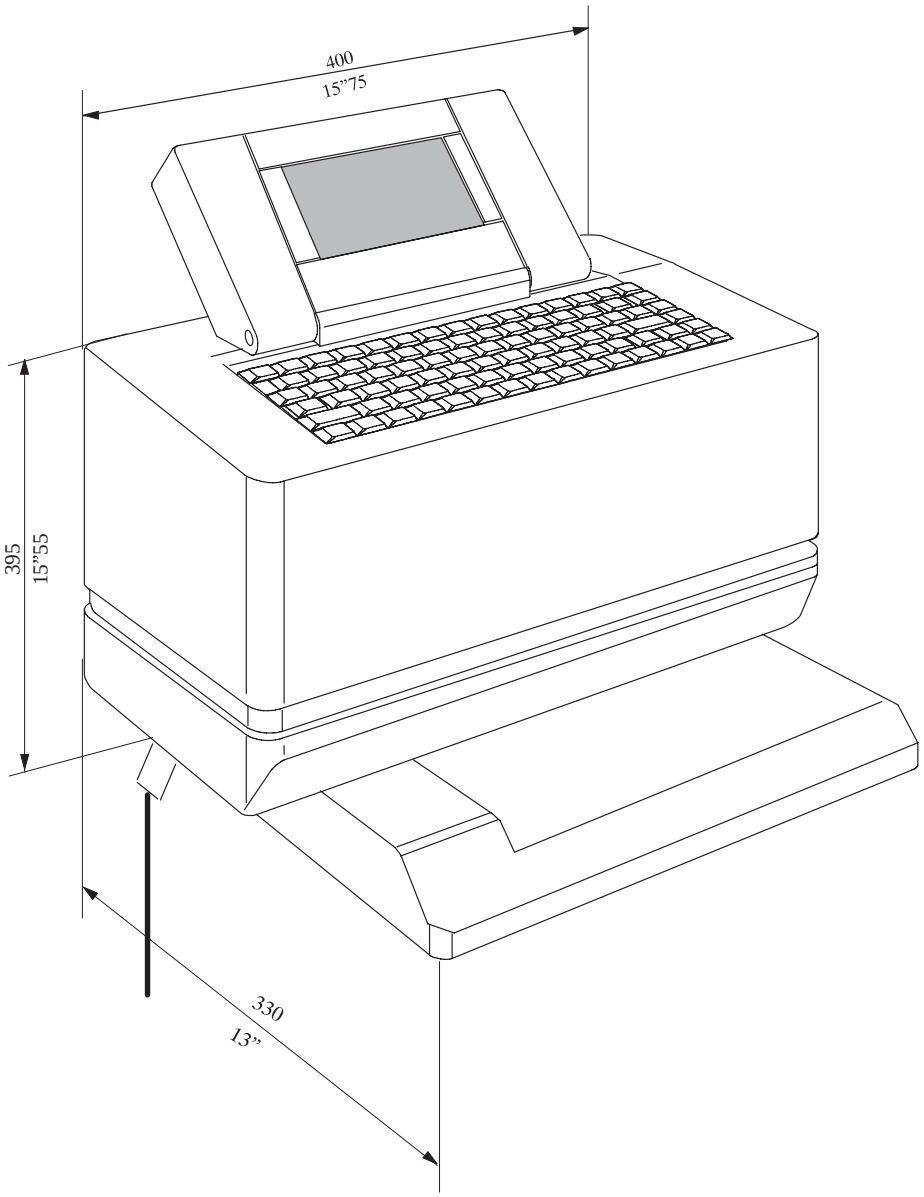

SECTION 2
MOUNTING REQUIREMENTS

Given that the Senographe DMR has a modular design, its optimal use depends on the relative position of the modules (see the Installation Plan prepared for each site).

However, the gantry and rad shield screen require a minimum amount of ”free space” (see Table 3–2 below).

TABLE 3–2
MOUNTING REQUIREMENTS

PRODUCT/ COMPONENT	Length mm (*feet*)		Width mm (*feet*)		Height mm (*feet*)	
Gantry	3000	(*10*)	2500	(*8.20*)	2500	(*8.20*)
Rad shield screen	1525	(*5*)	1200	(*3.94*)	2000	(*6.56*)

SECTION 3
NOISE

- 60 dBA at 1 m (*3’3”*).

SECTION 4
RADIATION SHIELDING

The RAD shield screen has a 1 mm (0.04”) lead thickness equivalency.

The limit value for the whole–body equivalent dose must not exceed 50 mSev (5Rem) per year for the European Regulations.

The minimum permissible distances to be out of these limits, under the mentioned parameters, are given on page 3–12/Illustration 3–9.

ILLUSTRATION 3–9
ISODOSE CURVE 50MSEV

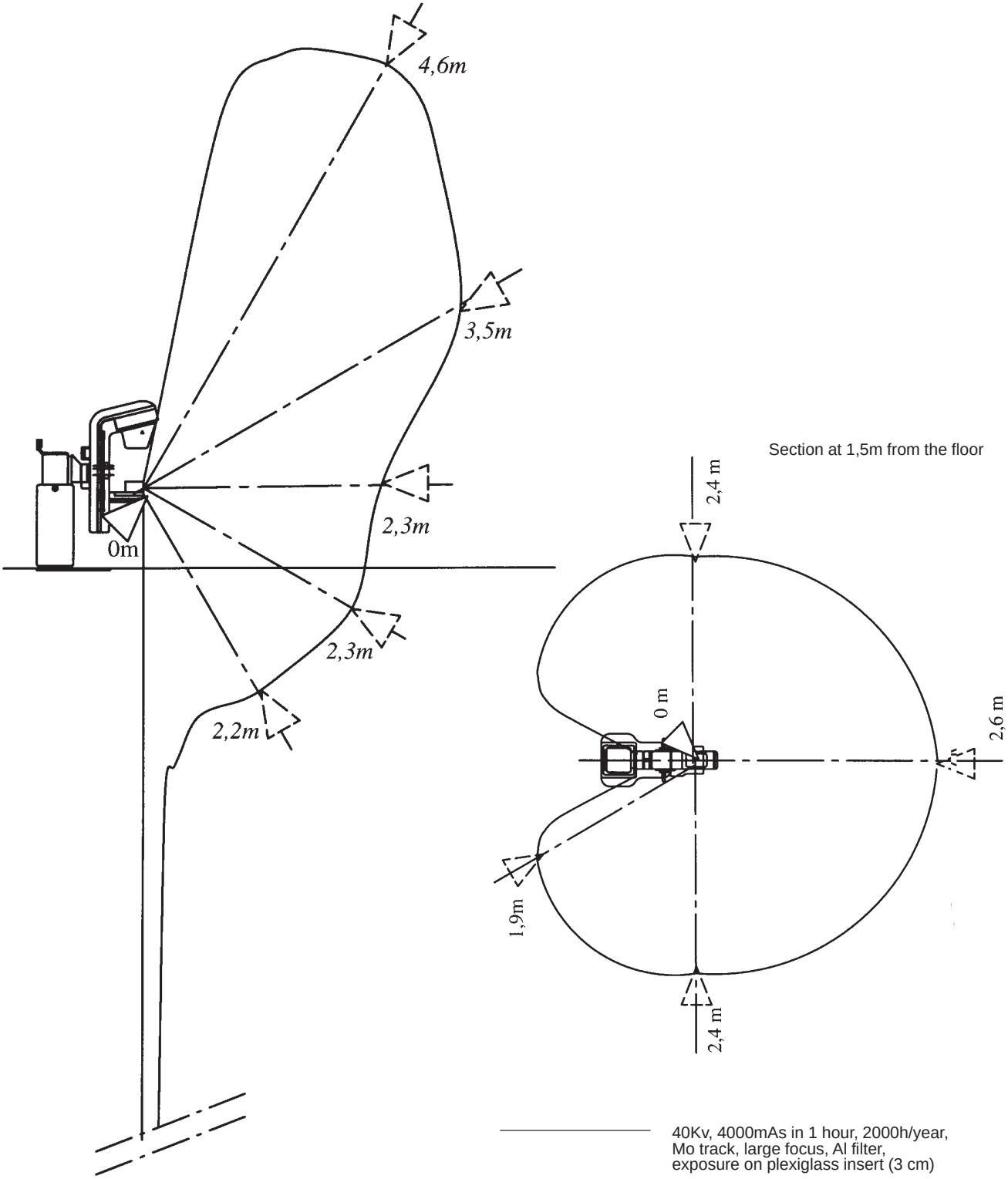

Prod. Physical Carac.

CHAPTER 4 – ADDITIONAL PLANNING AIDS

ILLUSTRATION 4–1
INTERCONNECTION SCHEMATIC

A = Input voltage = 480 V single–phase.

B = Input voltage = 200/208/220/240/380/415 V single–phase.

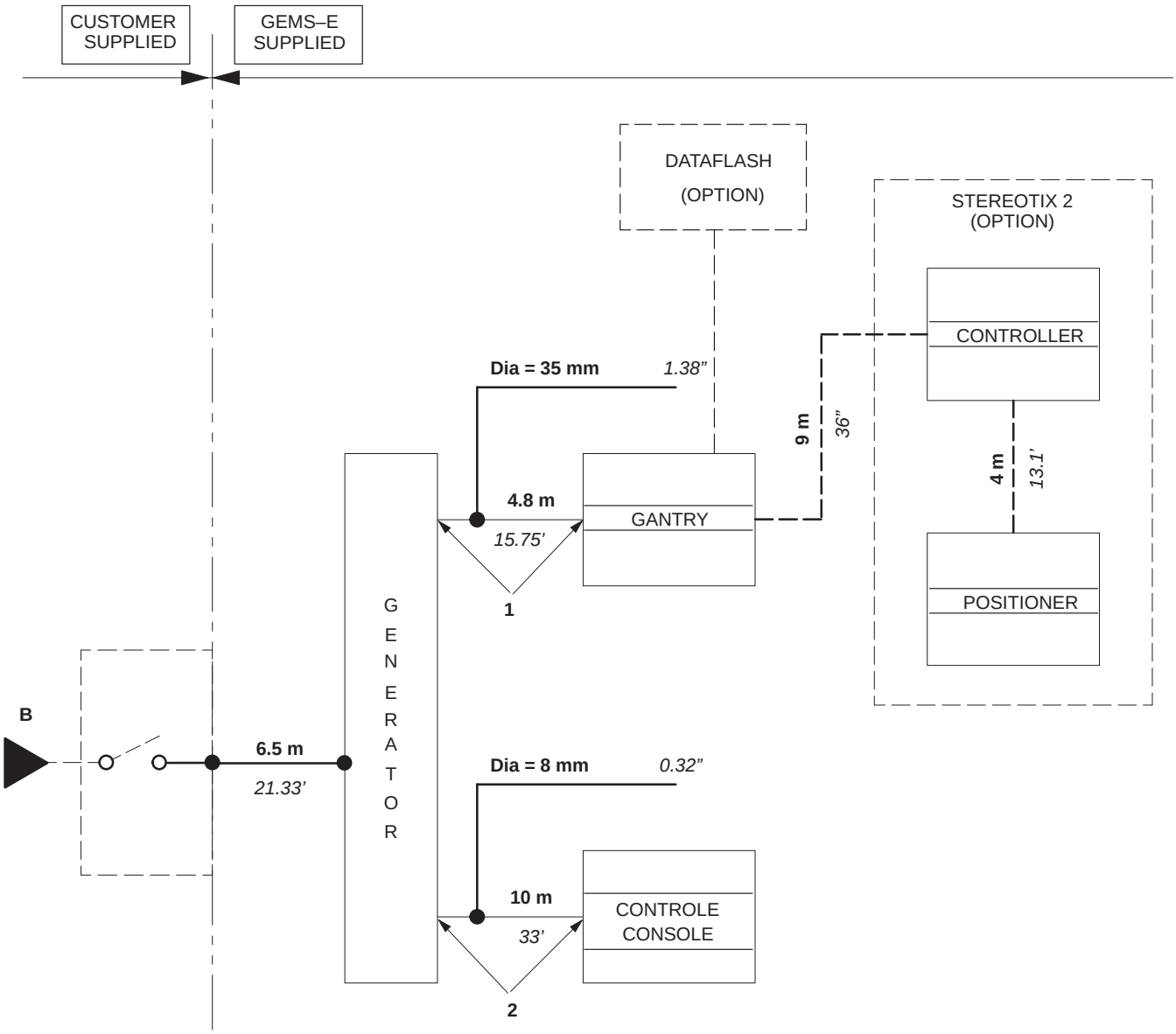

ALL CABLES LENGTHS INDICATED ARE USABLE LENGTHS

SECTION 1
PRODUCT SHIPPING INFORMATION

AIR AND ROAD SHIPMENT

PRODUCT/ COMPONENT	HEIGHT X WIDTH X DEPTH	WEIGHT POUNDS (daN)	METHOD OF SHIPMENT
SENO DMR	6’36 X 3’. X 7’. (1.94 X 0.90 X 2.14)	1476 (670)	PALLET
STEREOTIX 2 (OPTION)	2.29’ X 2.17’ X4.85’ (0.70 X 0.66 X 1.48)	199 (85)	CRATE
ACCESSORIES STORAGE DEVICE (OPTION)	4.13’ X 2.18’ X 3.54’ (1.26 X 0.68 X 1.08)	308 (140)	CRATE
DATAFLASH (OPTION)	17.7” X 13” X 15.75” 0.45 X 0.33 X 0.40	27.5 (12.5)	CRATE

SECTION 2
TOOLS AND TEST EQUIPMENT

- NOT APPLICABLE.

SECTION 3
INTERCONNECTIONS

- See Illustration 4−1.

1 MAXIMUM CONNECTOR SIZE: 72 mm dia (3” dia)

2 MAXIMUM CONNECTOR SIZE: 56 mm x 15 mm (2.1” x 0.6”)

Blank page