GE Healthcare

Innova 2100-IQ, 3100/3100-IQ, 4100/4100-IQ Cardiovascular Imaging System

Pre-Installation Manual

OPERATING DOCUMENTATION

5314528-2-1EN
Revision 1

ATTENTION

LES APPAREILS A RAYONS X SONT DANGEREUX A LA FOIS POUR LE PATIENT ET POUR LE MANIPULATEUR SI LES MESURES DE PROTECTION NE SONT PAS STRICTEMENT APPLIQUEES

Bien que cet appareil soit construit selon les normes de sécurité les plus sévères, la source de rayonnement X représente un danger lorsque le manipulateur est non qualifié ou non averti.
Une exposition excessive au rayonnement X entraîne des dommages à l'organisme.
Par conséquent, toutes les précautions doivent être prises pour éviter que les personnes non autorisées ou non qualifiées utilisent cet appareil créant ainsi un danger pour les autres et pour elles-mêmes.
Avant chaque manipulation, les personnes qualifiées et autorisées à se servir de cet appareil doivent se renseigner sur les mesures de protection établies par la Commission Internationale de la Protection Radiologique, Annales 26 : Recommandations de la Commission Internationale sur la Protection Radiologique et les normes nationales en vigueur.

WARNING

X-RAY EQUIPMENT IS DANGEROUS TO BOTH PATIENT AND OPERATOR UNLESS MEASURES OF PROTECTION ARE STRICTLY OBSERVED

Though this equipment is built to the highest standards of electrical and mechanical safety, the useful x-ray beam becomes a source of danger in the hands of the unauthorized or unqualified operator.
Excessive exposure to x-radiation causes damage to human tissue.
Therefore, adequate precautions must be taken to prevent unauthorized or unqualified persons from operating this equipment or exposing themselves or others to its radiation.
Before operation, persons qualified and authorized to operate this equipment should be familiar with the Recommendations of the International Commission on Radiological Protection, contained in Annals Number 26 of the ICRP, and with applicable national standards.

ATENCION

LOS APARATOS DE RAYOS X SON PELIGROSOS PARA EL PACIENTE Y EL MANIPULADOR CUANDO LAS NORMAS DE PROTECCION NO ESTAN OBSERVADAS

Aunque este aparato está construido según las normas de seguridad más estrictas, la radiación X constituye un peligro al ser manipulado por personas no autorizadas o incompetentes. Una exposición excesiva a la radiación X puede causar daños al organismo.
Por consiguiente, se deberán tomar todas las precauciones necesarias para evitar que las personas incompetentes o no autorizadas utilicen este aparato, lo que sería un peligro para los demás y para sí mismas.
Antes de efectuar las manipulaciones, las personas habilitadas y competentes en el uso de este aparato, deberán informarse sobre las normas de protección fijadas por la Comisión Internacional de la Protección Radiológica, Anales No 26: Recomendaciónes de la Comisión Internacional sobre la Protección Radiológica y normas nacionales.

ACHTUNG

RÖNTGENAPPARATE SIND EINE GEFAHR FÜR PATIENTEN SOWIE BEDIENUNGSPERSONAL, WENN DIE GELTENDEN SICHERHEITSVORKEHRUNGEN NICHT GENAU BEACHTET WERDEN

Dieser Apparat entspricht in seiner Bauweise strengsten elektrischen und mechanischen Sichereitsnormen, doch in den Händen unbefugter oder unqualifizierter Personen wird er zu einer Gefahrenquelle.
Übermäßige Röntgenbestrahlung ist für den menschlichen Organismus schädlich.
Deswegen sind hinreichende Vorsichtsmaßnahmen erforderlich, um zu verhindern, daßunbefugte oder unqualifizierte Personen solche Geräte bedienen oder sich selbst und andere Personen deren Bestrahlung aussetzen können.
Vor Inbetriebnahme dieses Apparats sollte sich das qualifizierte und befugte Bedienungspersonal mit den geltenden Kriterien für den gefahrlosen Strahleneinsatz durch sorgfältiges Studium des Hefts Nr. 26 der Internationalen Kommission für Strahlenschutz (ICRP) vertraut machen: Empfehlungen der Internationalen Kommission für Strahlenschutz und anderer nationaler Normenbehörden.

Important Information

LANGUAGE

ПРЕДУПРЕЖДЕНИЕ (BG)

- ТОВА УПЪТВАНЕ ЗА РАБОТА Е НАЛИЧНО САМО НА АНГЛИЙСКИ ЕЗИК.
- АКО ДОСТАВЧИКЪТ НА УСЛУГАТА НА КЛИЕНТА ИЗИСКА ЕЗИК, РАЗЛИЧЕН ОТ АНГЛИЙСКИ, ЗАДЪЛЖЕНИЕ НА КЛИЕНТА Е ДА ОСИГУРИ ПРЕВОД.
- НЕ ИЗПОЛЗВАЙТЕ ОБОРУДВАНЕТО ПРЕДИ ДА СТЕ СЕ КОНСУЛТИРАЛИ И РАЗБРАЛИ УПЪТВАНЕТО ЗА РАБОТА.
- НЕСПАЗВАНЕТО НА ТОВА ПРЕДУПРЕЖДЕНИЕ МОЖЕ ДА ДОВЕДЕ ДО НАРАНЯВАНЕ НА ДОСТАВЧИКА НА УСЛУГАТА, ОПЕРАТОРА ИЛИ ПАЦИЕНТ В РЕЗУЛТАТ НА ТОКОВ УДАР ИЛИ МЕХАНИЧНА ИЛИ ДРУГА ОПАСНОСТ.

警告 (ZH-CN)

- 本维修手册仅提供英文版本。
- 如果维修服务提供商需要非英文版本，客户需自行提供翻译服务。
- 未详细阅读和完全理解本维修手册之前，不得进行维修。
- 忽略本警告可能对维修人员，操作员或患者造成触电、机械伤害或其他形式的伤害。

VÝSTRAHA (CS)

- TENTO PROVOZNÍ NÁVOD EXISTUJE POUZE V ANGLICKÉM JAZYCE.
- V PŘÍPADĚ, ŽE EXTERNÍ SLUŽBA ZÁKAZNÍKŮM POTŘEBUJE NÁVOD V JINÉM JAZYCE, JE ZAJIŠTĚNÍ PŘEKLADU DO ODPOVÍDAJÍCÍHO JAZYKA ÚKOLEM ZÁKAZNÍKA.
- NESNAŽTE SE O ÚDRŽBU TOHOTO ZAŘÍZENÍ, ANIŽ BYSTE SI PŘEČETLI TENTO PROVOZNÍ NÁVOD A POCHOPILI JEHO OBSAH.
- V PŘÍPADĚ NEDODRŽOVÁNÍ TÉTO VÝSTRAHY MŮŽE DOJÍT K PORANĚNÍ PRACOVNÍKA PRODEJNÍHO SERVISU, OBSLUŽNÉHO PERSONÁLU NEBO PACIENTŮ VLIVEM ELEKTRICKÉHOP PROUDU, RESPEKTIVE VLIVEM MECHANICKÝCH ČI JINÝCH RIZIK.

ADVARSEL (DA)

- DENNE SERVICEMANUAL FINDES KUN PÅ ENGELSK.
- HVIS EN KUNDES TEKNIKER HAR BRUG FOR ET ANDET SPROG END ENGELSK, ER DET KUNDENS ANSVAR AT SØRGE FOR OVERSÆTTELSE.
- FORSØG IKKE AT SERVICERE UDSTYRET MEDMINDRE DENNE SERVICEMANUAL HAR VÆRET KONSULTERET OG ER FORSTÅET.
- MANGLENDE OVERHOLDELSE AF DENNE ADVARSEL KAN MEDFØRE SKADE PÅ GRUND AF ELEKTRISK, MEKANISK ELLER ANDEN FARE FOR TEKNIKEREN, OPERATØREN ELLER PATIENTEN.

WAARSCHUWING (NL)

- DEZE ONDERHOUDSHANDLEIDING IS ENKEL IN HET ENGELS VERKRIJGBAAR.
- ALS HET ONDERHOUDSPERSONEEL EEN ANDERE TAAL VEREIST, DAN IS DE KLANT VERANTWOORDELIJK VOOR DE VERTALING ERVAN.
- PROBEER DE APPARATUUR NIET TE ONDERHOUDEN VOORDAT DEZE ONDERHOUDSHANDLEIDING WERD GERAADPLEEGD EN BEGREPEN IS.
- INDIEN DEZE WAARSCHUWING NIET WORDT OPGEVOLGD, ZOU HET ONDERHOUDSPERSONEEL, DE OPERATOR OF EEN PATIËNT GEWOND KUNNEN RAKEN ALS GEVOLG VAN EEN ELEKTRISCHE SCHOK, MECHANISCHE OF ANDERE GEVAREN.

WARNING (EN)

- THIS SERVICE MANUAL IS AVAILABLE IN ENGLISH ONLY.
- IF A CUSTOMER'S SERVICE PROVIDER REQUIRES A LANGUAGE OTHER THAN ENGLISH, IT IS THE CUSTOMER'S RESPONSIBILITY TO PROVIDE TRANSLATION SERVICES.
- DO NOT ATTEMPT TO SERVICE THE EQUIPMENT UNLESS THIS SERVICE MANUAL HAS BEEN CONSULTED AND IS UNDERSTOOD.
- FAILURE TO HEED THIS WARNING MAY RESULT IN INJURY TO THE SERVICE PROVIDER, OPERATOR, OR PATIENT FROM ELECTRIC SHOCK, OR FROM MECHANICAL OR OTHER HAZARDS.

HOIATUS (ET)

- KÄESOLEV TEENINDUSJUHEND ON SAADAVAL AINULT INGLISE KEELES.
- KUI KLIENDITEENINDUSE OSUTAJA NÕUAB JUHENDIT INGLISE KEELEST ERINEVAS KEELES, VASTUTAB KLIENT TÕLKETEENUSE OSUTAMISE EEST.
- ÄRGE ÜRITAGE SEADMEID TEENINDADA ENNE EELNEVALT KÄESOLEVA TEENINDUSJUHENDIGA TUTVUMIST JA SELLEST ARU SAAMIST.
- KÄESOLEVA HOIATUSE EIRAMINE VÕIB PÕHJUSTADA TEENUSEOSUTAJA, OPERAATORI VÕI PATSIENDI VIGASTAMIST ELEKTRILÖÖGI, MEHAANILISE VÕI MUU OHU TAGAJÄRJEL.

VAROITUS (FI)

- TÄMÄ HUOLTO-OHJE ON SAATAVILLA VAIN ENGLANNIKSI.
- JOS ASIAKKAAN HUOLTOHENKILÖSTÖ VAATII MUUTA KUIN ENGLANNINKIELISTÄ MATERIAALIA, TARVITTAVAN KÄÄNNÖKSEN HANKKIMINEN ON ASIAKKAAN VASTUULLA.
- ÄLÄ YRITÄ KORJATA LAITTEISTOA ENNEN KUIN OLET VARMASTI LUKENUT JA YMMÄRTÄNYT TÄMÄN HUOLTO-OHJEEN.
- MIKÄLI TÄTÄ VAROITUSTA EI NOUDATETA, SEURAUKSENA VOI OLLA HUOLTOHENKILÖSTÖN, LAITTEISTON KÄYTTÄJÄN TAI POTILAAN VAHINGOITTUMINEN SÄHKÖISKUN, MEKAANISEN VIAN TAI MUUN VAARATILANTEEN VUOKSI.

ATTENTION (FR)

- CE MANUEL DE SERVICE N'EST DISPONIBLE QU'EN ANGLAIS.
- SI LE TECHNICIEN DU CLIENT A BESOIN DE CE MANUEL DANS UNE AUTRE LANGUE QUE L'ANGLAIS, C'EST AU CLIENT QU'IL INCOMBE DE LE FAIRE TRADUIRE.
- NE PAS TENTER D'INTERVENIR SUR LES EQUIPEMENTS TANT QUE LE MANUEL SERVICE N'A PAS ETE CONSULTE ET COMPRIS.
- LE NON-RESPECT DE CET AVERTISSEMENT PEUT ENTRAÎNER CHEZ LE TECHNICIEN, L'OPÉRATEUR OU LE PATIENT DES BLESSURES DUES À DES DANGERS ÉLECTRIQUES, MÉCANIQUES OU AUTRES.

WARNUNG (DE)

- DIESE SERVICEANLEITUNG EXISTIERT NUR IN ENGLISCHER SPRACHE.
- FALLS EIN FREMDER KUNDENDIENST EINE ANDERE SPRACHE BENÖTIGT, IST ES AUFGABE DES KUNDEN FÜR EINE ENTSPRECHENDE ÜBERSETZUNG ZU SORGEN.
- VERSUCHEN SIE NICHT DIESE ANLAGE ZU WARTEN, OHNE DIESE SERVICEANLEITUNG GELESEN UND VERSTANDEN ZU HABEN.
- WIRD DIESE WARNUNG NICHT BEACHTET, SO KANN ES ZU VERLETZUNGEN DES KUNDENDIENSTTECHNIKERS, DES BEDIENERS ODER DES PATIENTEN DURCH STROMSCHLÄGE, MECHANISCHE ODER SONSTIGE GEFAHREN KOMMEN.

ΠΡΟΕΙΔΟΠΟΙΗΣΗ (EL)

- ΤΟ ΠΑΡΟΝ ΕΓΧΕΙΡΙΔΙΟ ΣΕΡΒΙΣ ΔΙΑΤΙΘΕΤΑΙ ΣΤΑ ΑΓΓΛΙΚΑ ΜΟΝΟ.
- ΕΑΝ ΤΟ ΑΤΟΜΟ ΠΑΡΟΧΗΣ ΣΕΡΒΙΣ ΕΝΟΣ ΠΕΛΑΤΗ ΑΠΑΙΤΕΙ ΤΟ ΠΑΡΟΝ ΕΓΧΕΙΡΙΔΙΟ ΣΕ ΓΛΩΣΣΑ ΕΚΤΟΣ ΤΩΝ ΑΓΓΛΙΚΩΝ, ΑΠΟΤΕΛΕΙ ΕΥΘΥΝΗ ΤΟΥ ΠΕΛΑΤΗ ΝΑ ΠΑΡΕΧΕΙ ΥΠΗΡΕΣΙΕΣ ΜΕΤΑΦΡΑΣΗΣ.
- ΜΗΝ ΕΠΙΧΕΙΡΗΣΕΤΕ ΤΗΝ ΕΚΤΕΛΕΣΗ ΕΡΓΑΣΙΩΝ ΣΕΡΒΙΣ ΣΤΟΝ ΕΞΟΠΛΙΣΜΟ ΕΚΤΟΣ ΕΑΝ ΕΧΕΤΕ ΣΥΜΒΟΥΛΕΥΤΕΙ ΚΑΙ ΕΧΕΤΕ ΚΑΤΑΝΟΗΣΕΙ ΤΟ ΠΑΡΟΝ ΕΓΧΕΙΡΙΔΙΟ ΣΕΡΒΙΣ.
- ΕΑΝ ΔΕ ΛΑΒΕΤΕ ΥΠΟΨΗ ΤΗΝ ΠΡΟΕΙΔΟΠΟΙΗΣΗ ΑΥΤΗ, ΕΝΔΕΧΕΤΑΙ ΝΑ ΠΡΟΚΛΗΘΕΙ ΤΡΑΥΜΑΤΙΣΜΟΣ ΣΤΟ ΑΤΟΜΟ ΠΑΡΟΧΗΣ ΣΕΡΒΙΣ, ΣΤΟ ΧΕΙΡΙΣΤΗ Ή ΣΤΟΝ ΑΣΘΕΝΗ ΑΠΟ ΗΛΕΚΤΡΟΠΛΗΞΙΑ, ΜΗΧΑΝΙΚΟΥΣ Ή ΑΛΛΟΥΣ ΚΙΝΔΥΝΟΥΣ.

FIGYELMEZTETÉS (HU)

- EZEN KARBANTARTÁSI KÉZIKÖNYV KIZÁRÓLAG ANGOL NYELVEN ÉRHETŐ EL.
- HA A VEVŐ SZOLGÁLTATÓJA ANGOLTÓL ELTÉRŐ NYELVRE TART IGÉNYT, AKKOR A VEVŐ FELELŐSSÉGE A FORDÍTÁS ELKÉSZÍTTETÉSE.
- NE PRÓBÁLJA ELKEZDENI HASZNÁLNI A BERENDEZÉST, AMÍG A KARBANTARTÁSI KÉZIKÖNYVBEN LEÍRTAKAT NEM ÉRTELMEZTÉK.
- EZEN FIGYELMEZTETÉS FIGYELMEN KÍVÜL HAGYÁSA A SZOLGÁLTATÓ, MŰKÖDTETŐ VAGY A BETEG ÁRAMÜTÉS, MECHANIKAI VAGY EGYÉB VESZÉLYHELYZET MIATTI SÉRÜLÉSÉT EREDMÉNYEZHETI.

AÐVÖRUN (IS)

- ÞESSI ÞJÓNUSTUHANDBÓK ER EINGÖNGU FÁANLEG Á ENSKU.
- EF AÐ ÞJÓNUSTUVEITANDI VIÐSKIPTAMANNS ÞARFNAST ANNAS TUNGUMÁLS EN ENSKU, ER ÞAÐ SKYLDA VIÐSKIPTAMANNS AÐ SKAFFA TUNGUMÁLAÞJÓNUSTU.
- REYNIÐ EKKI AÐ AFGREIÐA TÆKIÐ NEMA AÐ ÞESSI ÞJÓNUSTUHANDBÓKHEFUR VERIÐ SKOÐUÐ OG SKILIN.
- BROT Á SINNA ÞESSARI AÐVÖRUN GETUR LEITT TIL MEIÐSLA Á ÞJÓNUSTUVEITANDA, STJÓRNANDA EÐA SJÚKLINGS FRÁ RAFLOSTI, VÉLRÆNU EÐA ÖÐRUM ÁHÆTTUM.

AVVERTENZA (IT)

- IL PRESENTE MANUALE DI MANUTENZIONE E DISPONIBILE SOLTANTO IN INGLESE.
- SE UN ADDETTO ALLA MANUTENZIONE ESTERNO ALLA GEMS RICHIEDE IL MANUALE IN UNA LINGUA DIVERSA, IL CLIENTE E TENUTO A PROVVEDERE DIRETTAMENTE ALLA TRADUZIONE.
- SI PROCEDA ALLA MANUTENZIONE DELL'APPARECCHIATURA SOLO DOPO AVER CONSULTATO IL PRESENTE MANUALE ED AVERNE COMPRESO IL CONTENUTO.
- IL NON RISPETTO DELLA PRESENTE AVVERTENZA POTREBBE FAR COMPIERE OPERAZIONI DA CUI DERIVINO LESIONI ALL'ADDETTO ALLA MANUTENZIONE, ALL'UTILIZZATORE ED AL PAZIENTE PER FOLGORAZIONE ELETTRICA, PER URTI MECCANICI OD ALTRI RISCHI.

警告 (JA)

- このサービスマニュアルには英語版しかありません。
- サービスを担当される業者が英語以外の言語を要求される場合、翻訳作業はその業者の責任で行うものとさせていただきます。
- このサービスマニュアルを熟読し理解せずに、装置のサービスを行わないでください。
- この警告に従わない場合、サービスを担当される方、操作員あるいは患者さんが、感電や機械的又はその他の危険により負傷する可能性があります。

경고 (KO)

- 본 서비스 지침서는 영어로만 이용하실 수 있습니다.
- 고객의 서비스 제공자가 영어 이외의 언어를 요구할 경우, 번역 서비스를 제공하는 것은 고객의 책임입니다.
- 본 서비스 지침서를 참고했고 이해하지 않는 한은 해당 장비를 수리하려고 시도하지 마십시오.
- 이 경고에 유의하지 않으면 전기 쇼크, 기계상의 혹은 다른 위험으로부터 서비스 제공자, 운영자 혹은 환자에게 위해를 가할 수 있습니다.

BRĪDINĀJUMS (LV)

- ŠĪ APKALPES ROKASGRĀMATA IR PIEEJAMA TIKAI ANGĻU VALODĀ.
- JA KLIENTA APKALPES SNIEDZĒJAM NEPIECIEŠAMA INFORMĀCIJA CITĀ VALODĀ, NEVIS ANGĻU, KLIENTA PIENĀKUMS IR NODROŠINĀT TULKOŠANU.
- NEVEICIET APRĪKOJUMA APKALPI BEZ APKALPES ROKASGRĀMATAS IZLASĪŠANAS UN SAPRAŠANAS.
- ŠĪ BRĪDINĀJUMA NEIEVĒROŠANA VAR RADĪT ELEKTRISKĀS STRĀVAS TRIECIENA, MEHĀNISKU VAI CITU RISKU IZRAISĪTU TRAUMU APKALPES SNIEDZĒJAM, OPERATORAM VAI PACIENTAM.

ĮSPĖJIMAS (LT)

- ŠIS EKSPLOATAVIMO VADOVAS YRA PRIEINAMAS TIK ANGLŲ KALBA.
- JEI KLIENTO PASLAUGŲ TIEKĖJAS REIKALAUJA VADOVO KITA KALBA – NE ANGLŲ, NUMATYTI VERTIMO PASLAUGAS YRA KLIENTO ATSAKOMYBĖ.
- NEMĖGINKITE ATLIKTI ĮRANGOS TECHNINĖS PRIEŽIŪROS, NEBENT ATSIŽVELGĖTE Į ŠĮ EKSPLOATAVIMO VADOVĄ IR JĮ SUPRATOTE.
- JEI NEATKREIPSITE DĖMESIO Į ŠĮ PERSPĖJIMĄ, GALIMI SUŽALOJIMAI DĖL ELEKTROS ŠOKO, MECHANINIŲ AR KITŲ PAVOJŲ PASLAUGŲ TIEKĖJUI, OPERATORIUI AR PACIENTUI.

ADVARSEL (NO)

- DENNE SERVICEHÅNDBOKEN FINNES BARE PÅ ENGELSK.
- HVIS KUNDENS SERVICELEVERANDØR TRENGER ET ANNET SPRÅK, ER DET KUNDENS ANSVAR Å SØRGE FOR OVERSETTELSE.
- IKKE FORSØK Å REPARERE UTSTYRET UTEN AT DENNE SERVICEHÅNDBOKEN ER LEST OG FORSTÅTT.
- MANGLENDE HENSYN TIL DENNE ADVARSELEN KAN FØRE TIL AT SERVICELEVERANDØREN, OPERATØREN ELLER PASIENTEN SKADES PÅ GRUNN AV ELEKTRISK STØT, MEKANISKE ELLER ANDRE FARER.

OSTRZEŻENIE (PL)

- NINIEJSZY PODRĘCZNIK SERWISOWY DOSTĘPNY JEST JEDYNIE W JĘZYKU ANGIELSKIM.
- JEŚLI DOSTAWCA USŁUG KLIENTA WYMAGA JĘZYKA INNEGO NIŻ ANGIELSKI, ZAPEWNIENIE USŁUGI TŁUMACZENIA JEST OBOWIĄZKIEM KLIENTA.
- NIE PRÓBOWAĆ SERWISOWAĆ WYPOSAŻENIA BEZ ZAPOZNANIA SIĘ I ZROZUMIENIA NINIEJSZEGO PODRĘCZNIKA SERWISOWEGO.
- NIEZASTOSOWANIE SIĘ DO TEGO OSTRZEŻENIA MOŻE SPOWODOWAĆ URAZY DOSTAWCY USŁUG, OPERATORA LUB PACJENTA W WYNIKU PORAŻENIA ELEKTRYCZNEGO, ZAGROŻENIA MECHANICZNEGO BĄDŹ INNEGO.

ATENÇÃO (PT)

- ESTE MANUAL DE ASSISTÊNCIA TÉCNICA SÓ SE ENCONTRA DISPONÍVEL EM INGLÊS.
- SE QUALQUER OUTRO SERVIÇO DE ASSISTÊNCIA TÉCNICA, QUE NÃO A GEMS, SOLICITAR ESTES MANUAIS NOUTRO IDIOMA, É DA RESPONSABILIDADE DO CLIENTE FORNECER OS SERVIÇOS DE TRADUÇÃO.
- NÃO TENTE REPARAR O EQUIPAMENTO SEM TER CONSULTADO E COMPREENDIDO ESTE MANUAL DE ASSISTÉNCIA TÉCNICA.
- O NÃO CUMPRIMENTO DESTE AVISO PODE POR EM PERIGO A SEGURANÇA DO TÉCNICO, OPERADOR OU PACIENTE DEVIDO A CHOQUES ELÉTRICOS, MECÂNICOS OU OUTROS.

ATENȚIE (RO)

- ACEST MANUAL DE SERVICE ESTE DISPONIBIL NUMAI ÎN LIMBA ENGLEZĂ.
- DACĂ UN FURNIZOR DE SERVICII PENTRU CLIENȚI NECESITĂ O ALTĂ LIMBĂ DECÂT CEA ENGLEZĂ, ESTE DE DATORIA CLIENTULUI SĂ FURNIZEZE O TRADUCERE.
- NU ÎNCERCAȚI SĂ REPARAȚI ECHIPAMENTUL DECÂT ULTERIOR CONSULTĂRII ȘI ÎNȚELEGERII ACESTUI MANUAL DE SERVICE.
- IGNORAREA ACESTUI AVERTISMENT AR PUTEA DUCE LA RĂNIREA DEPANATORULUI, OPERATORULUI SAU PACIENTULUI ÎN URMA PERICOLELOR DE ELECTROCUTARE, MECANICE SAU DE ALTĂ NATURĂ.

ОСТОРОЖНО! (RU)

- ДАННОЕ РУКОВОДСТВО ПО ОБСЛУЖИВАНИЮ ПРЕДЛАГАЕТСЯ ТОЛЬКО НА АНГЛИЙСКОМ ЯЗЫКЕ.
- ЕСЛИ СЕРВИСНОМУ ПЕРСОНАЛУ КЛИЕНТА НЕОБХОДИМО РУКОВОДСТВО НЕ НА АНГЛИЙСКОМ, А НА КАКОМ-ТО ДРУГОМ ЯЗЫКЕ, КЛИЕНТУ СЛЕДУЕТ САМОСТОЯТЕЛЬНО ОБЕСПЕЧИТЬ ПЕРЕВОД.
- ПЕРЕД ОБСЛУЖИВАНИЕМ ОБОРУДОВАНИЯ ОБЯЗАТЕЛЬНО ОБРАТИТЕСЬ К ДАННОМУ РУКОВОДСТВУ И ПОЙМИТЕ ИЗЛОЖЕННЫЕ В НЕМ СВЕДЕНИЯ.
- НЕСОБЛЮДЕНИЕ ТРЕБОВАНИЙ ДАННОГО ПРЕДУПРЕЖДЕНИЯ МОЖЕТ ПРИВЕСТИ К ТОМУ, ЧТО СПЕЦИАЛИСТ ПО ОБСЛУЖИВАНИЮ, ОПЕРАТОР ИЛИ ПАЦИЕНТ ПОЛУЧАТ УДАР ЭЛЕКТРИЧЕСКИМ ТОКОМ, МЕХАНИЧЕСКУЮ ТРАВМУ ИЛИ ДРУГОЕ ПОВРЕЖДЕНИЕ.

UPOZORNENIE (SK)

- TENTO NÁVOD NA OBSLUHU JE K DISPOZÍCII LEN V ANGLIČTINE.
- AK ZÁKAZNÍKOV POSKYTOVATEĽ SLUŽIEB VYŽADUJE INÝ JAZYK AKO ANGLIČTINU, POSKYTNUTIE PREKLADATEĽSKÝCH SLUŽIEB JE ZODPOVEDNOSŤOU ZÁKAZNÍKA.
- NEPOKÚŠAJTE SA O OBSLUHU ZARIADENIA SKÔR, AKO SI NEPREČÍTATE NÁVOD NA OBLUHU A NEPOROZUMIETE MU.
- ZANEDBANIE TOHTO UPOZORNENIA MÔŽE VYÚSTIŤ DO ZRANENIA POSKYTOVATEĽA SLUŽIEB, OBSLUHUJÚCEJ OSOBY ALEBO PACIENTA ELEKTRICKÝM PRÚDOM, DO MECHANICKÉHO ALEBO INÉHO NEBEZPEČENSTVA.

ATENCION (ES)

- ESTE MANUAL DE SERVICIO SOLO EXISTE EN INGLES.
- SI ALGUN PROVEEDOR DE SERVICIOS AJENO A GEMS SOLICITA UN IDIOMA QUE NO SEA EL INGLES, ES RESPONSABILIDAD DEL CLIENTE OFRECER UN SERVICIO DE TRADUCCION.
- NO SE DEBERA DAR SERVICIO TECNICO AL EQUIPO, SIN HABER CONSULTADO Y COMPRENDIDO ESTE MANUAL DE SERVICIO.
- LA NO OBSERVANCIA DEL PRESENTE AVISO PUEDE DAR LUGAR A QUE EL PROVEEDOR DE SERVICIOS, EL OPERADOR O EL PACIENTE SUFRAN LESIONES PROVOCADAS POR CAUSAS ELÉCTRICAS, MECÁNICAS O DE OTRA NATURALEZA.

VARNING (SV)

- DEN HÄR SERVICEHANDBOKEN FINNS BARA TILLGÄNGLIG PÅ ENGELSKA.
- OM EN KUNDS SERVICETEKNIKER HAR BEHOV AV ETT ANNAT SPRÅK ÄN ENGELSKA ANSVARAR KUNDEN FÖR ATT TILLHANDAHÅLLA ÖVERSÄTTNINGSTJÄNSTER.
- FÖRSÖK INTE UTFÖRA SERVICE PÅ UTRUSTNINGEN OM DU INTE HAR LÄST OCH FÖRSTÅR DEN HÄR SERVICEHANDBOKEN.
- OM DU INTE TAR HÄNSYN TILL DEN HÄR VARNINGEN KAN DET RESULTERA I SKADOR PÅ SERVICETEKNIKERN, OPERATÖREN ELLER PATIENTEN TILL FÖLJD AV ELEKTRISKA STÖTAR, MEKANISKA FAROR ELLER ANDRA FAROR.

DİKKAT (TR)

- BU SERVİS KILAVUZUNUN SADECE İNGİLİZCESİ MEVCUTTUR.
- EĞER MÜŞTERİ TEKNİSYENİ BU KILAVUZU İNGİLİZCE DIŞINDA BİR BAŞKA LİSANDAN TALEP EDERSE, BUNU TERCÜME ETTİRMEK MÜŞTERİYE DÜŞER.
- SERVİS KILAVUZUNU OKUYUP ANLAMADAN EKİPMANLARA MÜDAHALE ETMEYİNİZ.
- BU UYARIYA UYULMAMASI, ELEKTRİK, MEKANİK VEYA DİĞER TEHLİKELERDEN DOLAYI TEKNİSYEN, OPERATÖR VEYA HASTANIN YARALANMASINA YOL AÇABİLİR.

This page left intentionally blank.

Revision History

Part/Rev	Date	Reason for Change	Pages
5314528-1-1EN rev 1	30 July, 2008	Initial release	302
5314528-2-1EN rev 1	December 19, 2008	Initial release of 5314528-2-1EN. The previous release was 5314528-1-1EN	220

This page left intentionally blank.

Table of Contents

CHAPTER 1 INTRODUCTION . . . 23
1 Object and Scope of this manual . . . 23
2 Responsibilities of the Purchaser/Customer . . . 24
3 Pre-Installation Process . . . 25

CHAPTER 2 INNOVA SYSTEMS . . . 27
1 Description of Innova System . . . 27
1.1 Description of the Innova LC positioner . . . 27
1.2 Description of the Innova Patient table . . . 27
1.2.1 Innova 2100–IQ Case . . . 27
1.2.2 Innova 3100/3100-IQ and 4100/4100-IQ Case . . . 27
1.3 Description of the X–Ray generator . . . 27
1.4 Description of the X–Ray head . . . 28
1.5 Description of the Innova Imaging System . . . 28
1.6 Description of the image monitors suspensions . . . 28
1.7 Description of the DL and associated devices . . . 29
1.8 AW workstation . . . 29
1.9 CENTRICITY CA1000 option . . . 29
1.10 Injectors . . . 29
1.11 Fluoro UPS option . . . 30
1.12 Intravascular Ultrasound (IVUS) Option . . . 32
1.12.1 Purpose . . . 32
1.12.2 Product Description . . . 32
2 Innova Product Identification . . . 33
2.1 Innova LC Basic Product . . . 33
2.2 C1 Cabinet . . . 34
2.3 C2 Cabinet . . . 34
2.4 Omega Patient Table . . . 35
2.5 Tilt Patient Table . . . 35
2.6 User Interface . . . 36
2.7 Fluoro UPS . . . 37
2.8 UPS IF Box . . . 37

2.9 X–Ray Tube Chiller . . . 38
2.10 Digital Detector Chillers . . . 38
2.11 Innova User Area . . . 39
2.12 IVUS Option . . . 40
3 Basic Innova System Compatibility . . . 41
3.1 System Compatibility Cross–Reference – Innova LC Positioner . . . 41
3.2 System Compatibilities Cross–Reference – Tables Sub-System . . . 41
3.3 System Compatibilities Cross–Reference – Jedi X–Ray Generator . . . 41
3.4 System Compatibility Cross–Reference – X–Ray Head . . . 41
3.5 System Compatibility Cross–Reference – Innova LC Imaging And X–Ray Control . . . 42
3.6 System Compatibility Cross–Reference – Monitor Support & Suspension . . . 42
3.7 System Compatibilities Cross–Reference – 21” (53 CM), 17” (43 CM), 18” & 19” Monitors . . . 43
4 Optional Innova System Components . . . 44
4.1 System Compatibilities Cross–Reference – Omega Table Sub–System . . . 44
4.2 System Compatibilities Cross–Reference – Wall Mount Monitor . . . 44

CHAPTER 3 PHYSICAL REQUIREMENTS OF ROOM . . . 45
1 Presentation of the 3 Rooms . . . 45
1.1 Examination room . . . 45
1.2 Technical room . . . 45
1.3 Control room . . . 45
2 Environmental Requirements/Limitations . . . 46
2.1 Room Climate . . . 46
2.2 Equipment Heat Output (Dissipation) . . . 47
2.2.1 Equipment Heat Output tables . . . 47
2.2.2 Fluoro UPS Option . . . 49
2.2.3 IVUS Option . . . 50
2.2.3.1 Environmental Limitations in Use (room climate) . . . 50
2.2.3.2 Heat Output . . . 51
2.3 Equipment Classifications . . . 51
2.4 IEC60601–1–2 Electromagnetic Standard Compliance & Documentation . . . 51
2.4.1 General Scope . . . 51
2.4.2 Electromagnetic Emission . . . 52

2.4.3 Electromagnetic Immunity . . . 52
2.4.3.1 Electromagnetic Immunity . . . 52
2.4.3.2 Electromagnetic Immunity IEC 60601–1–2 . . . 54
2.4.3.3 Recommended Separation Distances for Portable and Mobile RF Communications Equipment IEC 60601–1–2 . . . 55
2.4.4 Limitations Management . . . 55
2.4.5 Use Limitation . . . 55
2.4.6 Installations Requirements & Environment Control . . . 56
2.5 Radiation Protection . . . 57
2.6 Audible noise . . . 57
2.7 Windows and curtains . . . 57
3 Structural Requirements . . . 58
3.1 Room Size . . . 58
3.2 Door Size Requirements . . . 58
3.2.1 Door Height . . . 58
3.2.2 Door Width . . . 58
3.3 Floor . . . 58
3.3.1 General Vascular GEMS Policy . . . 58
3.3.2 Floor requirements when using provided floor anchors . . . 59
3.3.3 Pan Type Floor Construction Requirement . . . 59
3.3.4 Hole dimension and preferred location in concrete floor . . . 61
3.3.5 Water Pipe Requirements . . . 63
3.3.6 Seismic areas . . . 66
3.4 Ceiling . . . 66
3.4.1 Rail Mounting . . . 67
3.4.2 Bolt Specifications . . . 67
3.4.3 Select Rails . . . 67
3.4.4 Boom Mounted for Monitor Suspension . . . 69
3.4.5 Cable Support for Monitor Cables . . . 71
3.5 Walls . . . 71
3.5.1 General requirement . . . 71
3.5.2 Seismic Areas . . . 71
4 Functional Requirements . . . 72
4.1 Electrical Requirements . . . 72

4.2 Room Speaker . . . 74
4.3 Room Lighting . . . 74
5 Emergency . . . 75
5.1 Main power supply cut . . . 75
5.2 System failure . . . 75
6 Insite/Network Connection . . . 76

CHAPTER 4 ROOM LAYOUTS . . . 77
1 Room Layout Considerations . . . 77
1.1 Radiation Protection . . . 77
1.2 Service Access . . . 77
1.3 Clinical Access . . . 77
1.4 Peripheral Equipment . . . 77
1.5 Emergency Stop . . . 78
1.6 Patient Environment Equipment . . . 78
1.7 Preference Cabinet locations . . . 79
1.8 Layout Constraints . . . 80
2 Room Layout Drawings . . . 81
2.1 Room layout and room min length . . . 82
2.2 Room Layout for Innova System (example 1 & 2- Suspension rails parallel to table) . . . 84
2.3 Room Layout for Innova System (example 3) . . . 87
2.4 Room Layout for Innova System (example 4) . . . 89
2.5 Room Lighting for Innova System . . . 91
2.6 Room Layout for Innova System (example with Mobile system 9800) . . . 93
3 IVUS Option . . . 95
3.1 Functional Diagram . . . 95

CHAPTER 5 PHYSICAL CHARACTERISTICS . . . 97
1 Dimension Drawings . . . 97
2 Mounting Requirements . . . 124
2.1 Floor Loading and Recommended Mounting Methods . . . 124
2.2 Positioner and Table Floor Mounting . . . 125
2.3 Innova LC Positioner and Omega/Tilt Table Floor Preparation Kits (GEMS supplied) . . . 136
2.3.1 2285048 - Base Plate Assembly . . . 138

2.3.2 2360538 – Elegance Add–On Kit . . . 139
2.3.3 2285050 – Assembly and separation select kit . . . 140
2.3.3.1 2285051 – Above grade, Floor Anchors without insert . . . 140
2.3.3.2 2285646 – Through bolts without insert . . . 141
2.3.3.3 2286398 – On grade, Floor anchor . . . 142
2.3.3.4 2285052 – Above grade, Floor anchor with insert . . . 143
2.3.3.5 2285053 – Through bolts with insert . . . 144
2.3.3.6 2285632 – Floor plate / Base plate assembly . . . 145
2.3.4 2285054 – Templates . . . 146
2.3.4.1 2285056 - A/C/N Templates . . . 146
2.3.4.2 2186109 – EP Template . . . 146
2.4 Injector Mounting Requirements . . . 147

CHAPTER 6 ELECTRICAL CONNECTIONS . . . 149
1 Power Distribution . . . 149
2 Recommended Power Distribution System . . . 152
2.1 Main functions . . . 152
2.2 Typical PDB (Europe CE) . . . 153
2.3 Typical US PDB . . . 158
2.4 Typical EMI Filter Box (CE configuration only) . . . 162
3 Grounding . . . 163
4 Power and Grounding Requirements . . . 166
4.1 Requirements for ground cables provided by the customer . . . 166
4.2 Requirements for power supply cables provided by the customer . . . 166
4.3 Requirements for all power supply and ground cables provided by the customer . . . 167
5 IVUS Option . . . 168
5.1 Wiring Diagram . . . 168
5.2 IVUS Floor Conduits . . . 169
5.3 Run Interconnection cables through the Conduit . . . 170
5.4 Electrical Requirements . . . 171
5.5 Ethernet Network Requirement . . . 171
6 X-Ray Lamp Room Distribution . . . 172
7 Room Light Distribution . . . 173
8 Room Speaker . . . 174

9 Door Interlocks . . . 175
10 Emergency . . . 176
10.1 Partial UPS Fluoro (option) . . . 176
10.2 Full UPS Record (option) . . . 176
11 Injectors . . . 177
11.1 Remote Injector (rack mount) . . . 177
11.2 Pedestal Injector . . . 177
11.3 Injector L.F. ILLUMINA . . . 177
12 Advantage Windows . . . 178
13 MAC-LAB System EX . . . 179
14 MIS (Master Interconnect System) . . . 180
15 Cable Channeling . . . 181
15.1 General . . . 181
15.2 Conduit . . . 181
15.3 Electrical Ducts . . . 181
16 Physical Runs . . . 184
16.1 Physical Run Synoptic . . . 184
16.2 System Core Matrix . . . 185
16.3 PHYSICAL RUN – SYSTEM CORE DETAIL . . . 192
17 PIST0021 - US Fluoro UPS and PDB connection . . . 195
17.3.1 Connection of the Power Distribution Box . . . 196
17.3.2 Connection of the Fluoro UPS Option Cables . . . 197

CHAPTER 7 ADDITIONAL PLANNING AIDS . . . 201
1 Shipping Information . . . 201
1.1 Product Shipping Information . . . 201
1.2 Detail Of Innova Shipping Information . . . 202
1.2.1 Innova LC Positioner Gantry On Shipping Dolly . . . 202
1.2.2 Innova LC Positioner Air Shipment . . . 203
1.2.3 Innova C1 and C2 Cabinet on pallet . . . 204
1.2.4 Omega Shipment . . . 205
1.2.5 Omega Using Positioner Dollies . . . 206
1.2.6 Tilt Table Shipment . . . 207
1.2.7 Other Elements Package . . . 207

2 Tools and Test Equipment 208
3 Route Survey 210
3.1 Step One — Sketch 210
3.2 Step Two — Survey 210
3.3 Step Three — Check 210
4 European Process Order Select 212
5 Pre-Installation Checklist 213

CHAPTER 8 IP ADDRESSING PROCESS 215
1 IP Addressing Process 215

CHAPTER 9 SEISMIC CALCULATIONS 217
1 Server Access 217

This page left intentionally blank.

Chapter 1 Introduction

1 Object and Scope of this manual

This document is intended as a guide and information resource to properly plan and prepare a site for the installation of an Innova system.

In addition, this document provides references to the pre–installation documents of the various product included with an Innova System.

These documents are intended to assist the Installation Specialist and the Site Planner in properly preparing a site for the installation of this system.

It provides pre–installation data, such as site preparation prior to the delivery of the Innova System, environmental and electrical requirements and some additional planning aids.

WARNING

MAKE SURE THE ROOM PREPARATION COMPLIES WITH LOCAL REGULATIONS AS THE PIM IS NOT INTENDED TO REFLECT ALL OF THEM

2 Responsibilities of the Purchaser/Customer

To ensure that the installation of an Innova System meets the purchaser or customer expectations, it is important to determine who will take responsibility for the various items during the system installation process. To help you in determining these responsibilities, review the following checklists with the customer and assign responsibilities as appropriate:

- Tool and Test Equipment (Chapter 7, Section 2, Tools and Test Equipment)
- Pre–Installation Checklist (Chapter 7, Section 5, Pre-Installation Checklist)

Contract Changes:

Be sure to inform the customer that the cost of any alteration or modification not specified in the sales contract are liable to the customer.

The following GE-supplied equipment must be installed by the Hospital's Contractors, per room drawings:

- PDB (Electrical Power Distribution Box or Main Disconnect Panel)
- LC Gantry & Table baseplate hole drilling (Per supplied template)
- LCD Monitor suspension stationary rails
- LC Gantry baseplate grout
- LC Gantry baseplate
- Omega/Tilt table common baseplate (if applicable)

3 Pre-Installation Process

Complete the checklists in *ROOM LAYOUTS*, *ELECTRICAL CONNECTIONS*, and *ADDITIONAL PLANNING AIDS* of this manual. They represent an important part of the pre–installation process. The checklists summarize the required preparations and allow to verify the proper completion of the pre–installation procedures.

You will find hereafter a chart of the information flow in the pre-installation process.

Illustration 1-1:

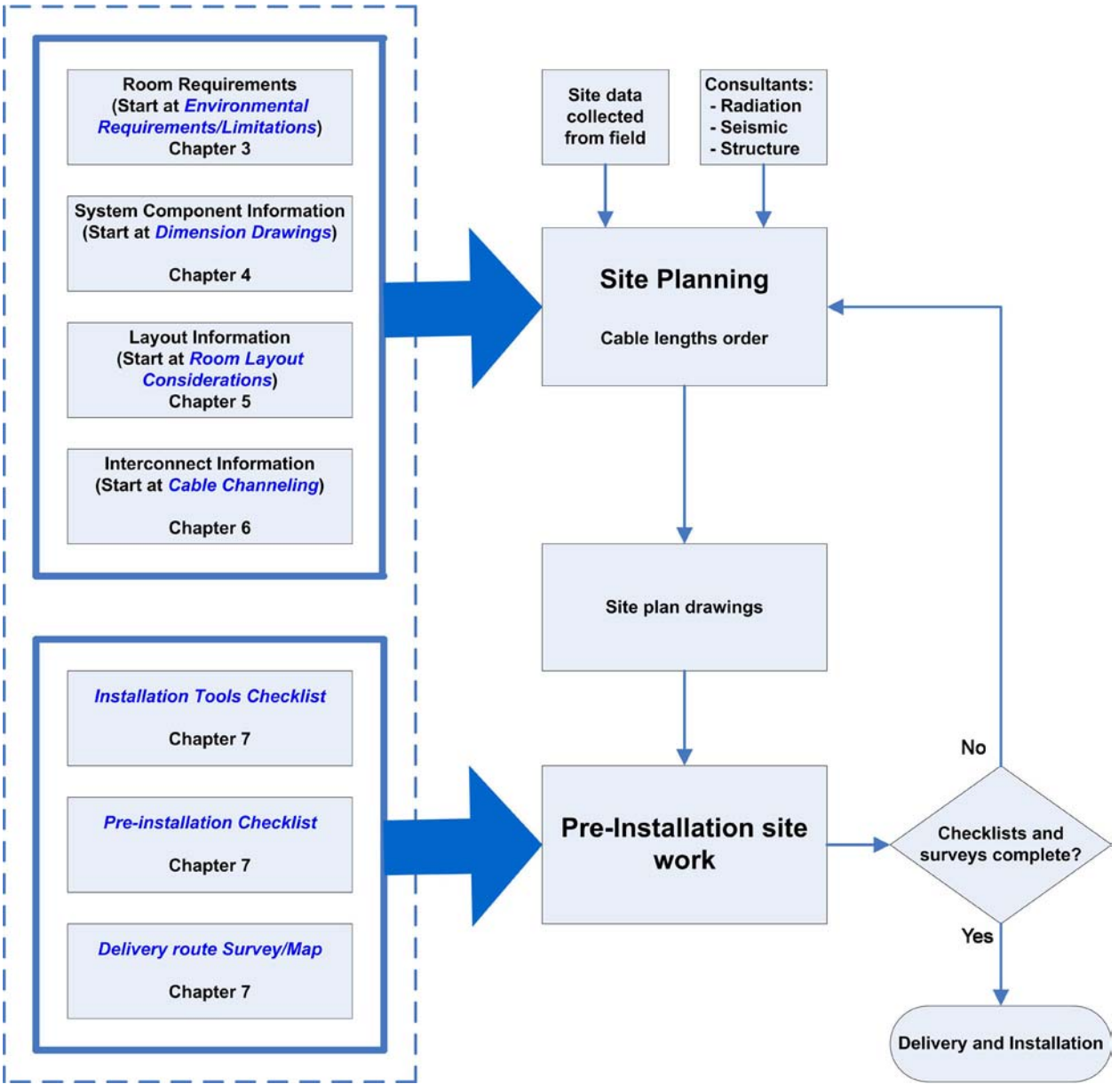

This page left intentionally blank.

Chapter 2 Innova Systems

1 Description of Innova System

1.1 Description of the Innova LC positioner

A complete Innova LC positioner comprises only three parts.

- Innova C2 cabinet
- Innova positioner including an X–ray tube housing with a collimator and a Revolution Digital Detector.
- TSSC, Smart Box or Smart handle (options for remote installation) .

1.2 Description of the Innova Patient table

1.2.1 Innova 2100–IQ Case

Innova 2100–IQ System can be supplied with an OMEGA IV Compact patient table, an OMEGA V long patient table, which includes a table side control with Contour Filter, or a Tilt patient table.

1.2.2 Innova 3100/3100-IQ and 4100/4100-IQ Case

Innova 3100/4100 Systems can be supplied with an OMEGA V Long patient table or Tilt patient table, which includes a table side control with Contour Filter.

Illustration 2-1:

1.3 Description of the X–Ray generator

The Innova System uses an Innova High Voltage System with component parts as follows according to the power requested (100 kW):

- Jedi – C1 cabinet,
- Ingrid H.V. tank mounted on the Performix 160A X–Ray tube housing.

1.4 Description of the X–Ray head

The Innova System uses a Performix 160A X–Ray tube housing:

- X–Ray tube
- collimator
- Ingrid HV tank
- oil/water exchanger
- contour filter
- tube chiller

NOTE: An external recirculating chiller is mandatory.

It is mandatory to place the Chiller in the Technical Room.

1.5 Description of the Innova Imaging System

An Innova System is managed and controlled by a System including (does not list all components):

- C1 cabinet, inside which the main components are the RTAC, the DL, the modem, the Firewall, the HUB, the KVM, the 4 KVA PDU and the Jedi generator,
- C2 cabinet positioner control,
- Fluoro UPS interface box near C1 cabinet (Fluoro UPS option),
- VCIM console,
- Revolution Digital Detector mounted on Innova LC positioner:
- An external Digital Detector chiller is mandatory.

- 53 cm (21”) Hi–Brite monitor,
- 43 cm (17”) Hi–Brite monitor (optional).
- LCD NEC 19” 1990 SXi Color Monitor.
- LCD 18” EIZO GmbH (formerly Siemens) SMD 18101G or 18102G B & W Monitor.
- LCD 19” EIZO GmbH SMD 19100G Color Monitor.
- LCD 19” GmbH SMD 19100G B & W Monitor.

1.6 Description of the image monitors suspensions

The common type of this suspension is an XT inboard monitor bridge.

A monitor frame support receiving 3 monitors (1 life monitor, 1 reference monitor, 1 Advantage Windows monitor).

A monitor frame support receiving 4 monitors (1 life monitor, 1 reference monitor, 1 Advantage Windows monitor (optional for Innova 2100–IQ), 1 ECG monitor).

A monitor frame support receiving 3, 4, or 6 LCD monitors (fixed monitor suspension).

Only for Control Area a Gyro TV® wall mount can supports the 2 Hi–Brite monitors 53 cm or 43 cm (21” or 17”).

1.7 Description of the DL and associated devices

An Innova System uses the DL Digital Imaging system.

- The C1 Cabinet contains:
  1. DL Computer,
  2. Modem (option)
  3. Firewall
  4. Ethernet switch
  5. KVM–local
  6. Video Splitter
- The user area is made of:
  1. I/R Receiver / Emitter
  2. DL color LCD monitor (19”)
  3. Keyboard,
  4. Mouse
  5. Keypads for user dialogue
  6. Video station:
     - Hi–Brite monitor in a user area
     - VCR in option

1.8 AW workstation

2 monitors 19’’ flat panel and 1 monitor (flat panel) fixed on suspension (option) and 1 video switcher. Check power input for switcher.

1.9 CENTRICITY CA1000 option

Refer to :*Centricity Cardiology CA 1000 V2.0 Preinstallation Guide* in the OEMs of the Innova 2100-IQ, 3100/3100-IQ, 4100/4100-IQ service manual.

1.10 Injectors

The recommended injectors are:

- LF Angiomat Illumina (pedestal only)
- Medrad Mark V + Provis (Table/rack mount or pedestal)
- ACIST CVI (table rail mounted or Standard/cart)
- Medrad Avanta (Pedestal only)

1.11 Fluoro UPS option

The Innova LC system can be protected with an optional Fluoro UPS.

There are two types of Fluoro UPS:

- UL for North America and other 480V – 60Hz countries.
- CE for Asia and Europe

WARNING

DO NOT CONNECT THE UPS BATTERIES PRIOR THE COMMISSIONING OF THE UPS (INITIAL POWER UP).

NOTICE

General safety instructions

- **Move the UPS in an upright position in its original package to the final destination room.**
  To lift the cabinets, use a forklift or lifting belts with spreader bars.
- **Check for sufficient floor and elevator loading capacity.**
- **Check the integrity of the UPS equipment carefully.**
- **If you notice visible damage, do not install or start the UPS. Contact the nearest Service Center immediately.**
  WARNING! RISK OF ELECTRICAL SHOCK: Do not remove covers; there are no user serviceable parts inside.
- **All installation, maintenance and service work should be performed by qualified service personnel.**
  The UPS contains its own energy source (battery).
- **The field–wiring terminals may be electrically live, even when the UPS is disconnected from the utility.**
- **Dangerous voltages may be present during battery operation. The battery must be disconnected during maintenance or service work.**
- **This UPS contains potentially hazardous voltages.**
- **Be aware that the inverter can restart automatically after the utility voltage is restored.**

NOTICE

Installation safety instructions:

- **Contractor responsibility:**
  - **Electrical contractor is responsible for providing and connecting the cables and configuring the PDB in by-pass mode.**
  - **GEHC is responsible for powering on the system with the UPS in by-pass mode.**
  - **GEDE is responsible for UPS comissioning.**
- **After removing the sidewalls of the UPS, make sure that all earth connections when reassembling, are correctly reattached.**
- **This UPS is intended for use in a controlled indoor environment free of conductive contaminants and protected against animals intrusion.**
- **HIGH GROUND LEAKAGE CURRENT: Ground connection is essential before connecting to AC input!**
  For Europe only, if a differential breaker is placed on the hospital main supply, upstream the PDB, the differential shall be set to 300 mA.
- **Switching OFF the unit does not isolate the UPS from the utility.**
- **Do not install the UPS in an excessively humid environment or near water.**
- **Avoid spilling liquids on or dropping any foreign object into the UPS.**
- **The unit must be placed in a sufficiently ventilated area; the ambient temperature should not exceed 104°F (40°C).**
- **Optimal battery life time is obtained if the ambient temperature does not exceed 77°F (25°C).**
- **It is important that air can move freely around and through the unit. Do not block the air vents.**
- **Avoid locations in direct sunlight or near heat sources.**
- **Check local regulations for UPS installation.**

NOTICE

Storage safety instructions:

- **Store the UPS in a dry location; storage temperature must be within –13°F (–25°C) to 131°F (55°C).**
- **If the unit is stored for a period exceeding 3 months, the battery must be recharged periodically (time depending on storage temperature).**

NOTICE

Battery safety instructions:

- **The battery–voltage is dangerous for person's safety.**
- **Never dispose of battery in a fire: They may explode.**
- **Do not open or mutilate battery: Their contents (electrolyte) may be extremely toxic.**
  If exposed to electrolyte, wash immediately with plenty of water.
- **Avoid charging in a sealed container.**

1.12 Intravascular Ultrasound (IVUS) Option

1.12.1 Purpose

Volcano is a manufacturer of intravascular ultrasound systems, which are used in the cath lab. GE has a strategic agreement with Volcano. GE will be selling and servicing some of the Volcano products.

1.12.2 Product Description

The Volcano IVUS s5i and s5i/GE systems are dedicated equipments for IntraVascular UltraSound imaging, designed as add on equipment to Vascular Imaging systems. The IVUS s5i/GE equipment is also capable of recieving patient data from the Innova system.

The Volcano IVUS Hardware configuration consists of:

- A computer (IVUS CPU) connected to a monitor (IVUS Monitor), both located in the Control Room,
- A Patient Interface Module (IVUS PIM) located in the Procedures Room
- Various user interface units to control the system
  - IVUS Control Station,
  - IVUS Joystick,
  - IVUS Keyboard & mouse pad installed in the Control Room,
- Optional Image Printer, located in the Control Room is available for the IVUS system

The IVUS integration to Innova, involves further components :

- Innova Central (Touchscreen) as optional control station,
- Video Signal Switch to route Workstation and IVUS video signals,,
- Procedures Room monitor shared by Workstation (AW or Ca1000) and IVUS operations,
- Network cable (IVUS to Innova system),
- Grounding cable (IVUS CPU to Patient Table ground bar),

2 Innova Product Identification

2.1 Innova LC Basic Product

Illustration 2-2:

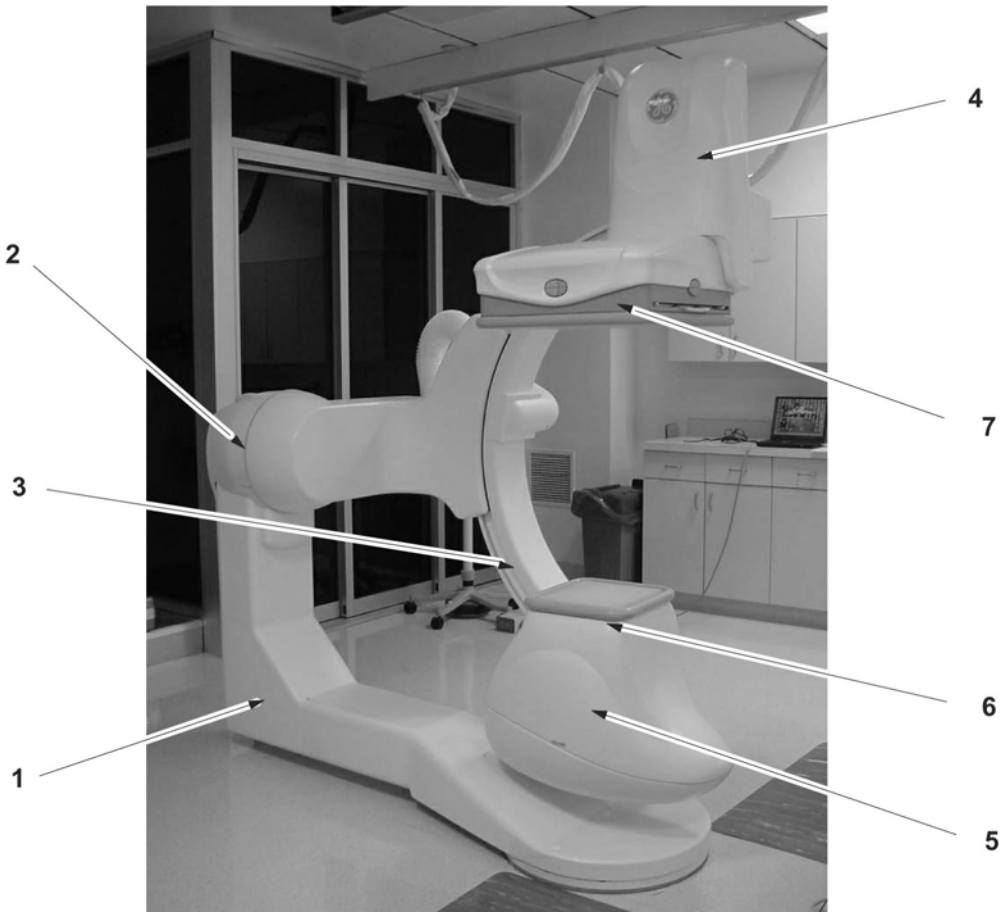

Innova LC positioner including:

- L-arm (Item 1),
- Pivot (Item 2),
- C-arc (Item 3),
- Motorized elevator (Item 4) for the Revolution Digital Detector,
- X–ray tube (Item 5),
- Siemens collimator (Item 6),
- 21 cm Revolution Digital Detector for Innova 2100-IQ (Item 7).
- 31 cm Revolution Digital Detector for Innova 3100 (Item 7).
- 41 cm Revolution Digital Detector for Innova 4100 (Item 7).

2.2 C1 Cabinet

Illustration 2-3:

2.3 C2 Cabinet

Illustration 2-4:

2.4 Omega Patient Table

Illustration 2-5:

OMEGA PATIENT TABLE

2.5 Tilt Patient Table

Illustration 2-6:

TILT PATIENT TABLE

2.6 User Interface

Illustration 2-7:

MULTIAXIS CONTROLE HANDLE
(OR SMART HANDLE +)

MULTIAXIS CONTROLE BOX
(OR SMART BOX)

TABLE SIDE CONTROL (OR TSSC+)
WITH CONTOUR FILTER FOR INNOVA 2100-IQ

MULTIAXIS CONTROLE BOX
(OR SMART BOX) WITH TILT TABLE

TABLE SIDE CONTROL (OR TSSC+)
WITH CONTOUR FILTER FOR INNOVA 3100/4100

BOLUS HANDLE WITH WALL BOX
FOR INNOVA 3100/4100 (OPTIONAL)

TABLE SIDE CONTROL (OR TSSC+)
WITH TILT TABLE

INNOVA CENTRAL TOUCHSCREEN
(OPTIONAL)

2.7 Fluoro UPS

Illustration 2-8:

UPS - UL

UPS - CE

NOTE: Refer to the UPS vendor Service manual Installation Guide SG Serie 10, 20, 30 & 40 kVA for more details

2.8 UPS IF Box

Illustration 2-9:

UPS IF BOX

2.9 X–Ray Tube Chiller

Illustration 2-10:

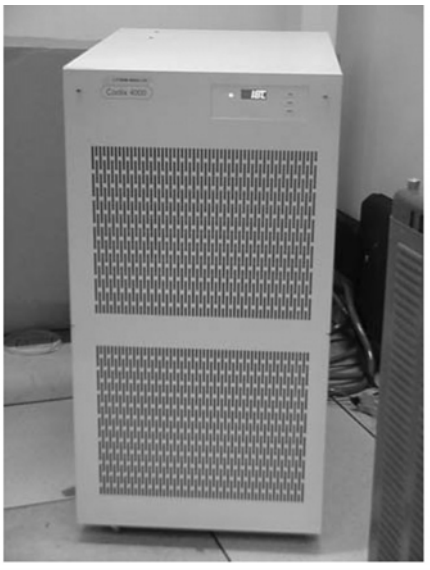

Lytron

2.10 Digital Detector Chillers

Illustration 2-11:

Thermo–Tek
(with Innova 3100/4100)

Thermo–Con
(with Innova 2100–IQ)

2.11 Innova User Area

Illustration 2-12:

Remote control

Keypad

Innova VCIM with DL keyboard console

DL color LCD monitor

Post processing color LCD monitors (Options)

Repeator B&W LCD monitors (Options)

Advantage windows monitor

Centricity CA1000 monitor

2.12 IVUS Option

Illustration 2-13:

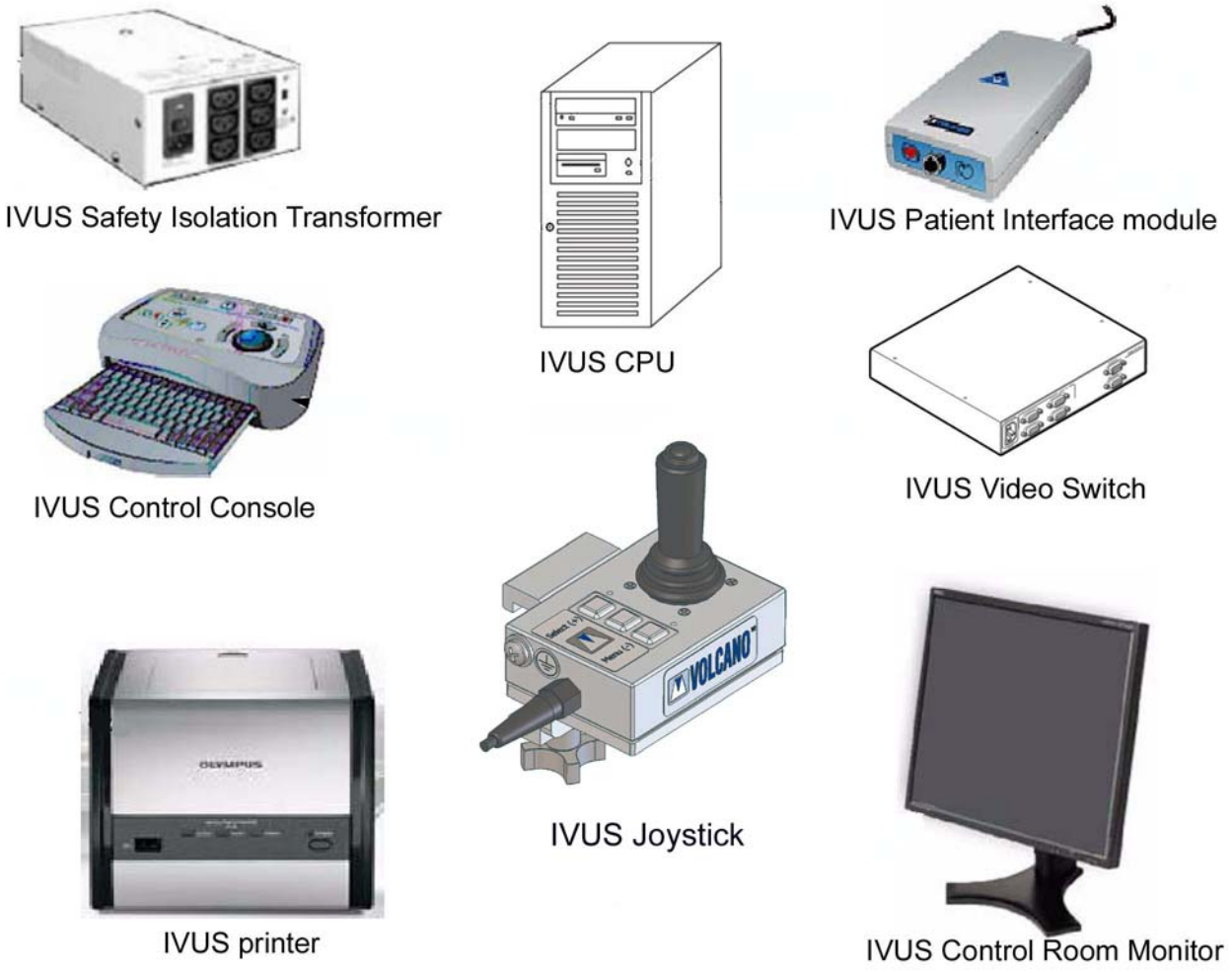

3 Basic Innova System Compatibility

3.1 System Compatibility Cross–Reference – Innova LC Positioner

PRODUCT NAME	MODEL NUMBER	PRE-INSTALLATION DOCUMENT NUMBER	NOTES
LC ANGIO POSITIONER	2341727	This document	HV cable 24 m
LC COMBO POSITIONER	2396420	This document	
LC CARDIO POSITIONER	5126671	This document	
C2 CABINET	2335139-2/2335139-4	This document	
SMART HANDLE+ SP	2237456-3/5127605	This document	Optional: Second MAC
SMART BOX+ SP	2237457-3/5127604	This document	Optional: Second MAC
SMART BOX	5184723	This document	Tilt Table
BOLUS HANDLE	2111431	This document	Optional

3.2 System Compatibilities Cross–Reference – Tables Sub-System

PRODUCT NAME	MODEL NUMBER	PRE-INSTALLATION DOCUMENT NUMBER	NOTES
TILT TABLE	2354463	This document	
OMEGA IV TABLE	2320221-3	This document	Includes tabletop
OMEGA V LONG TABLE	2320045-5	This document	Includes tabletop
OMEGA V NON MOTORIZED LONG TABLE	2320045-6	This document	Includes tabletop
TSSC+ W/ CF	2347973/5127602	This document	Optional: Second MAC
TSSC	5184194	This document	Tilt Table
TABLE PANNING DEVICE	2214620	NA	
Note 1: w/CF means with Contour Filter and w/o CF means without Contour Filter.			

3.3 System Compatibilities Cross–Reference – Jedi X–Ray Generator

PRODUCT NAME	MODEL NUMBER	PRE-INSTALLATION DOCUMENT NUMBER	NOTES
JEDI 100 VASC	2326480	NA	Includes C1 cabinet

3.4 System Compatibility Cross–Reference – X–Ray Head

PRODUCT NAME	MODEL NUMBER	PRE-INSTALLATION DOCUMENT NUMBER	NOTES
Performix 160 A X-Ray tube	D2801A	Not applicable	
Cardio collimator	5127609	Not applicable	
Angio collimator	2317741	Not applicable	

PRODUCT NAME	MODEL NUMBER	PRE-INSTALLATION DOCUMENT NUMBER	NOTES
COOLIX 4000 Chiller with RS232 (Innova 2100-IQ)	5115497	2358897-100	
COOLIX 4000 Chiller (Innova 3100/4100)	2228054-3	2358897-100	

3.5 System Compatibility Cross–Reference – Innova LC Imaging And X–Ray Control

PRODUCT NAME	MODEL NUMBER	PRE-INSTALLATION DOCUMENT NUMBER	NOTES
VCIM	2340519	NA	
DL Liberty user interface	2345576	This document	
C1 cabinet	2335129	This document	
Innova 2100-IQ, 21 cm Revolution Digital detector	5127984	This document	
Innova 3100, 31 cm Revolution Digital detector	2359035	This document	
Innova 4100, 41 cm Revolution Digital detector	2329766	This document	
Detector Chiller Thermo-Tek (with Innova 2100-IQ)	2387548	This document	
Detector Chiller Thermo-Con (with Innova 3100/4100)	5131740	This document	

3.6 System Compatibility Cross–Reference – Monitor Support & Suspension

PRODUCT NAME	MODEL NUMBER	PRE-INSTALLATION DOCUMENT NUMBER	CATALOG NUMBER
PRECABLED 3 MONITOR COUNTERBALANCED SUSPENSION: • 3 FFD and ECG (2) monitor frame support • 9 ft 6 in (2.9 m) Inboard Monitor Bridge • or 7 ft 9 in (2.4 m) Inboard Monitor Bridge	• 2353620 • 46-182884G2 • or 46-193992G2	2248370-100	• B2057AE • B2057AG
PRECABLED 4 MONITOR FIXED HEIGHT SUSPENSION: • 4 FFD monitor frame support (1) • 9 ft 6 in (2.9 m) Inboard Monitor Bridge • or 7 ft 9 in (2.4 m) Inboard Monitor Bridge	• 2353621 • 46-182884G2 • or 46-193992G2	2208876-100	• B2057AE • B2057AG
Note (1): With power strip for Innova			

PRODUCT NAME	MODEL NUMBER	PRE-INSTALLATION DOCUMENT NUMBER	CATALOG NUMBER
PRECABLED LCD 3 MONITOR SUSPENSION: • CABLE HARNESS 24 m • or CABLE HARNESS 36 m	5126893 • 2378538 • or 2378540	2393190-100	
PRECABLED LCD 4 MONITOR SUSPENSION: • CABLE HARNESS 24 m • or CABLE HARNESS 36 m	5126894 • 2378538 • or 2378540	2393190-100	
PRECABLED LCD 6 MONITOR SUSPENSION: • CABLE HARNESS 24 m • or CABLE HARNESS 36 m	5126896 • 2378538 • or 2378540	2393190-100	

3.7 System Compatibilities Cross–Reference – 21” (53 CM), 17” (43 CM), 18” & 19” Monitors

PRODUCT NAME	MODEL NUMBER	PRE-INSTALLATION DOCUMENT NUMBER	CATALOG NUMBER
17”- (43 cm) Flicker Free Extra Bright Monitor	2223415	sm 2224863-100	
21”- (53 cm) Flicker Free Extra Bright Monitor	2305765-3	sm 2224863-100	
LCD NEC 19” - 1990 SXi Color Monitor	5172850-2		
LCD 18” - EIZO GmbH (formerly Siemens) SMD18101G B& W Mon-SMD18101G B& W Monitor	2403949-2	sm 2408074-100	
	2403949-3		
LCD 19” – Eizo SMD19100G B& W with Stand	5148721-2	sm 5219983-100	
LCD 19” – Eizo SMD19100G B& W without Stand	5148721-3		
LCD 19” – Eizo SMD19100G Color with Stand	5148720-2		
LCD 19” – Eizo SMD19100G Color without Stand	5148720-3		

4 Optional Innova System Components

4.1 System Compatibilities Cross–Reference – Omega Table Sub–System

PRODUCT NAME	MODEL NUMBER	PRE-INSTALLATION DOCUMENT NUMBER	CATALOG NUMBER
SMART HANDLE	2237456-3/5127605	This document	
SMART BOX	2237457-3/5127604	This document	
TSSC+ SP W/ CF	2347973/5127602	This document	
Note 1: w/CF means with Contour Filter and w/o CF means without Contour Filter.			

4.2 System Compatibilities Cross–Reference – Wall Mount Monitor

PRODUCT NAME	MODEL NUMBER	PRE-INSTALLATION DOCUMENT NUMBER	CATALOG NUMBER
Wall Mount for 17 or 21” (43 or 53 cm)	2305202	2129003–100	
Note: The wall mount monitor is for Control Room only.			

Chapter 3 Physical Requirements of Room

1 Presentation of the 3 Rooms

1.1 Examination room

- Innova LC Positioner
- Omega Patient Table
- Performix X–Ray Tube Assembly
- Collimator
- Innova Digital Detector

WARNING

THE ELECTRONIC CABINETS (C1, C2, COOLIX 4000 CHILLER, DETECTOR CONDITIONER AND FLUORO UPS WHEN INSTALLED) INCLUDE FANS THAT ARE CREATING AIR–CIRCULATION OF PULSED–AIR. WHEN THIS PULSED AIR IS IN AN ENVIRONMENT THAT MAY CONTAIN AIRBORNE PATHOGENS LIKE AN EXAM ROOM/CONTROL ROOM, THERE IS A RISK OF TRANSMISSION OF THESE AIRBORNE PATHOGENS FROM PATIENTS TO OTHER PATIENTS OR CLINICAL PERSONNEL (NOSOCOMIAL DISEASES).
TO REDUCE THIS RISK, THE ELECTRONIC CABINETS MUST BE INSTALLED IN A ROOM SEPARATED FROM EXAM ROOM/CONTROL ROOM, I.E., TECHNICAL ROOM.

1.2 Technical room

- C2 Cabinet
- C1 Cabinet
- Coolix 4000 Chiller
- Detector Conditioner HEAT DRY 1
- Fluoro UPS (option) (1 Cabinet)
- Fluoro UPS IF box (option)

1.3 Control room

- VCIM
- DL Flat Panel
- DL Keyboard
- Monitors

2 Environmental Requirements/Limitations

2.1 Room Climate

NOTICE

Avoid extremes in temperatures

Innova system room climate requirements – relative humidity and temperature (individual products or components are classed by their installation area)

Table 3-1:

INSTALLATION ROOM OF PRODUCT OR COMPONENT	RELATIVE HUMIDITY (NON-CONDENSING)				TEMPERATURE					
	IN-USE		STORAGE		IN-USE (See Note (3))		RECOMMENDED (See Note (3))		STORAGE / TRANSPORT	
	MIN	MAX	MIN	MAX	MIN	MAX	MIN	MAX	MIN	MAX
Examination room	30%	70%	10%	70%	+15°C +59°F	+32°C +90°F	Design for Patient/ Operator Comfort		-10°C +14°F	+50°C +122°F
Technical room (See Note (1))	30%	75%	10%	70%	+10°C +50°F	+35°C +95°F	+13°C +55°F	+25°C +77°F	-14°C +8°F	+50°C +122°F
Technical room with Fluoro UPS optional	30%	75%	10%	70%	+20°C +68 °F	+25°C +77°F	+20°C +68 °F	+25°C +77°F	-5°C +23°F	+50°C +122°F
Control room	30%	75%	10%	70%	+10°C +50°F	+35°C +95°F	+20°C +68°F	+25°C +77°F	-10°C +14°F	+50°C +122°F
Innova Digital Detector	See Note (2)									

NOTE: (1): The target temperature (best recommended) is 18°C (64°F).

NOTE: (2): The detector should be stored at 10 to 40 °C (50 to 104 °F) and less than or equal to 90% RH in the plastic wrapped shipping box. (This should include two bags of desiccant as well). The lowest temperature (e.g. 10 ºC (50 °F)) and humidity is preferable. If they are to be stored outside of their shipping box or in the inner shipping box without plastic wrapping they should be stored at 20 °C (68 °F) or less and 30% RH or less. In terms of transportation, do not expose to temperatures below –20 ºC (–4 °F) **in its shipping box** for more than 15 hours. The detector will reach the ambient temperature after 20 to 25 hours. The detector should not be allowed to reach temperatures less than –10 ºC (14 °F) or irreparable damage to the detectors scintillator will occur. Care must be taken when removing a detector from a shipping box. If the detector has been subject to cold temperatures for an extended period the detector in the box should be allowed to sit in the plastic wrapped box to reach room temperature. This will prevent condensation from occurring. Condensation on the detector can cause irreparable damage to the electronics. Storage 10 to 40 ºC (50 to 104 °F); 10 to 90 % RH, 250 day storage transportation –20 to +60 ºC (–4 to 140 °F) and 10 to 80% RH. The Detector chiller HEAT DRY 1 is shipped within GEMS packaging.

NOTE: (3): **In use temperature limits** specify the range where the system shall work. Operating outside these limits could occur severe performance and reliability issues.

Recommended temperature limits specify the range where it is recommended to adjust air conditioning control in order to warranty current operations inside the in use range.

Relative Humidity and Temperature: Refer to Table 3-1 . To obtain relative humidity and temperature requirements for components not specified in Table 3-1 , refer to the appropriate component Pre–Installation Manual listed in Chapter 2, Section 3, Basic Innova LC System Compatibility.

Altitude and Atmospheric Pressure: Refer to Table 3-2 . To obtain altitude and atmospheric pressure requirements for components not specified in Table 3-2 , refer to the appropriate component Pre–Installation Manual listed in Chapter 2, Section 3, Basic Innova LC System Compatibility.

Table 3-2:

INSTALLATION ROOM OF PRODUCT OR COMPONENT	ALTITUDE (meters)				ATMOSPHERIC PRESSURE (kPa)			
	IN-USE		STORAGE / TRANSPORT		IN-USE		STORAGE / TRANSPORT	
	MIN	MAX	MIN	MAX	MIN	MAX	MIN	MAX
Examination room	0	3000	-30	3000	70	106	70	106
Technical room (See Notice below	0	3000	-30	3000	70	106	50	106
Control room	0	3000	0	3000	N/A	N/A	N/A	N/A

NOTICE

The chiller is able to dissipate maximum continuously power at 3000 meters in an ambient temperature up to 20°C, for this altitude the technical room temperature shall not exceed 20°C.

NOTICE

In some cases condensation occurs and water drops from outlets and pipes of the air conditioner in the technical room.

Therefore, it is critical to install the cabinets where there is no risk of flood from the air conditioner.

NOTICE

Ensure the air outlet positions in the exam room is not in area closed to monitor suspension carriage/rail.

2.2 Equipment Heat Output (Dissipation)

2.2.1 Equipment Heat Output tables

Refer to Table 3-3 . To obtain heat output information for components not specified in Table 3-3 , refer to the appropriate component Pre–Installation Manual listed in Chapter 2, Section 3, Basic Innova LC System Compatibility.

Table 3-3:

		HEAT OUTPUT							
		Stand by		Moderate Use (4)		Typical Use (4)		Maximum Use (4)	
Room	**Core System**	**kW**	**BTU/hr**	**kW**	**BTU/hr**	**kW**	**BTU/hr**	**kW**	**BTU/hr**
Exam Room	Innova LC positioner and table	0.41	1394	0.55	1858	0.89	3020	1.62	5517
Ctrl Room	DL user area with 1 TFT monitor	0.16	546	0.16	546	0.16	546	0.16	546
	2 B&W flat monitors	0.17	573	0.17	573	0.17	573	0.17	573
Tech Room	C1 Cabinet	0.41	1398	0.69	2366	0.99	3389	1.29	4412
	C2 Cabinet	0.29	989	0.33	1125	0.54	1828	0.87	2966
	Coolix X-Ray tube chiller (1) (2)	2.53	8619	4.49	15309	5.49	18725	6.93	23625
	Detector conditioner	0.21	709	0.21	709	0.21	709	0.21	709
	Main disconnect panel - PDB	0.4	1534	0.45	1534	0.45	1534	0.45	1534
Total for core system		4.6	15762	7.0	24020	8.9	30324	11.7	39881
Room	Options (3 & 5)	Stand by		Moderate Use (4)		Typical Use (4)		Maximum Use (4)	
Exam Room	3 in room B&W TFT monitors	0.25	859	Same values as Stand by		Same values as Stand by		Same values as Stand by	
	In room AW TFT monitor	0.12	409						
	Typical injector	0.09	320						
Ctrl Room	AW work station	0.35	1201						
	2 AW TFT monitors	0.24	818						
	Printer	0.31	1054						
Typical configuration without fluoro UPS		5.9	20424	8.4	28682	10.3	34985	13.1	44543

NOTE: (1) Air flow requirements 1200 m^3/h (706 CFM)

NOTE: (2) For more details, consult appropriate pre–installation manual

NOTE: (3) For UPS 20 kVA option refer to Section 2.2.2

NOTE: (4) **Moderate use**: 8 cases / 10 hours, **typical use**: 11 cases / 10 hours, **maximum use**: during case.

NOTE: (5) For IVUS enviromental limatations and heat output, refer to Section 2.2.3

2.2.2 Fluoro UPS Option

Illustration 3-1:

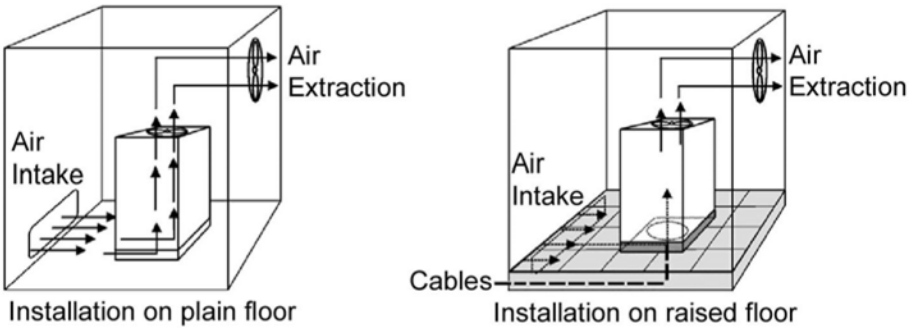

NOTICE

The Fluoro UPS batteries require a cooling system to keep ambient temperature below 25 ºC (77 ºF).

The heat produced by the UPS is transferred to the environment by its ventilation. Cooling air enters the cabinets through the air inlet (grids) located at the bottom and exhausted through the outlet on the roof. A suitable ventilation or cooling system must be installed to extract the heat from the UPS room.

CAUTION

Make sure there is a ventilation air flow, preferably ensured by natural air flow, otherwise by enforced ventilation, so that hydrogen concentration is below 1% (according to Standard IEC 62040-1-2).

NOTICE

Do not put anything on the top of the cabinet.

If the UPS is placed on a raised floor, the airflow for UPS cooling should enter from underneath the UPS, through the appropriate aperture on the raised floor.

If the UPS runs in a dusty environment, we recommend strongly to install filters on the air inlet of the UPS room. In this case it should be considered that these filters can cause reduced speed at the air inlet.

The size of the air inlet has therefore to be dimensioned accordingly.

Contact your Local Distributor or one of the Service Centre, which will help you to find valuable solutions.

The tables below indicate the heat dissipation at full load at **PF = 0.8 lag**. and charged battery, up to 1000 m (3280 ft) altitude, for cooling air 25°C (77°F) to 30°C (86°F).

- **VFI** (Voltage Frequency Independent) UPS system where the load is continously supplied by the inverter through the rectifier.

- **SEM** (Super Eco Mode) permitting the maximum energy saving.

Table 3-4: Fluoro UPS CE

Losses		Cooling air flow	
VFI	SEM	VFI	SEM
2.14 kW	0.64 kW	625 m^3/h	190 m^3/h

Table 3-5: Fluoro UPS UL

Losses		Cooling air flow	
BTU / hr	kW	CFM	m^3/h
6751	1.98	301	512

NOTICE

If installed in the technical room, the UPS may impact on it's layout. It may also be installed in a separate room. This depends on hospital constraints, local regulations or EHS rules. Clearance, weight of UPS, airflow and cooling system should be adapted for the UPS.

WARNING

ELECTRICAL CONTRACTOR IS RESPONSIBLE FOR PROVIDING AND CONNECTING THE CABLES FROM THE PDB TO THE UPS AND CONFIGURING THE PDB IN BYPASS MODE. GEHC IS RESPONSIBLE FOR POWERING ON THE SYSTEM WITH THE UPS IN BYPASS MODE. GEDE IS RESPONSIBLE FOR UPS COMMISSIONING.

CAUTION

The Fluoro UPS can be installed either in an Electrical Local with restricted access or in the innova technical room as per local regulations.

NOTICE

Make sure that local regulations have been applied for the installation of the Fluoro UPS (dedicated room/fire detection etc.)

NOTE: Refer to the UPS vendor Service manual Installation Guide SG Serie 10, 20, 30 & 40 kVA for more details

2.2.3 IVUS Option

2.2.3.1 Environmental Limitations in Use (room climate)

Humidity (non condensing) :	30 - 80 %	
Temperature (at 20% Relative Humidity) :	15 - 32 C	(60 - 90 F)
Altitude (Relative to see level) :	max 3048 m	(max 10000 ft)

2.2.3.2 Heat Output

Device	Location	Heat output
PC	Control room	335W – 1206 BTU/h
Monitor	Control room	125W – 427 BTU/h
Printer	Control room	67W – 229 BTU/h (idle)

WARNING

TAKE ANY STEPS NECESSARY TO PROVIDE CORRECT TEMPERATURE AND DUST FREE ENVIRONMENT FOR CORRECT OPERATION OF PC IN THE CONTROL ROOM.

2.3 Equipment Classifications

The following equipment classifications are applicable to the product:

Table 3-6:

Classification category	Equipment classification
Protection against electric shock	Class I
Degree of protection against electric shock	Type B
Degree of protection against harmful ingress of water.	Ordinary equipment (enclosed equipment without protection against ingress of water); except footswitch which is a watertight device (protected against the effects of submersion, IPX7).
Method(s) of sterilization or disinfection recommended by the manufacturer.	Sterilization: not applicable Disinfection: refer to operator manual (Chapter Safety and Regulatory section Disinfection), recommended disinfecting agents.
Degree of safety of application in the presence of a flammable anesthetic mixture with air or with oxygen or nitrous oxide.	Equipment not suitable for use in the presence of a flammable anesthetic mixture with air or with oxygen or nitrous oxide
Mode of operation	Continuous operation with intermittent loading

2.4 IEC60601–1–2 Electromagnetic Standard Compliance & Documentation

The information contained in this section is also found in the Innova system Operator Manual.

2.4.1 General Scope

This equipment complies with IEC60601–1–2 Edition 2 EMC standard for medical devices

The Innova system is suitable to be used in the electromagnetic environment, as per the limits & recommendations described in the tables here after:

- Emission Compliance level & limits (Table 3-7).
- Immunity Compliance level & recommendations to maintain equipment clinical utility (see Table 3-8 , Table 3-9 and Table 3-10).

NOTE: This system complies with above–mentioned EMC standard when used with supplied cables up to maximum lengths referenced in the MIS MAPS or system cables interconnect diagrams.

2.4.2 Electromagnetic Emission

The Innova system is suitable for use in the specified electromagnetic environment. The purchaser or user of the Innova system should assure that it is used in an electromagnetic environment as described below:

Table 3-7:

Emissions	Test Compliance	Electromagnetic Environment
Radio–Frequency Emissions CISPR11	Group1 Class A limits	The Innova system is suitable for use in all establishments other than domestic and those directly connected to the low voltage power supply network that supplies buildings used for domestic purposes.
	Group1 Class A limits	The Innova system uses RF energy only for its internal function. Therefore, the RF emission is very low and not likely to cause any interference in nearby electronic equipment.
Harmonic emissions IEC 61000–3–2	Not applicable	The Innova system is suitable for use only in establishments not directly connected to a public low voltage power supply network.
Voltage fluctuations/ flicker emissions IEC 61000–3–3	Not applicable	The Innova system is suitable for use only in establishments not directly connected to a public low voltage power supply network.

2.4.3 Electromagnetic Immunity

2.4.3.1 Electromagnetic Immunity

The Innova system is suitable for use in the specified electromagnetic environment. The purchaser or user of the Innova system should assure that it is used in an electromagnetic environment as described below:

Table 3-8:

Immunity Test	IEC 60601–1–2 Test Level	Compliance Level	Electromagnetic Environment
Electrostatic discharge (ESD) IEC 61000–4–2	6 kV contact 8 kV air	6 kV contact 8 kV air	Floors are wood, concrete, or ceramic tile, or floors are covered with synthetic material and the relative humidity is at least 30 percent.

Table 3-8: (cont'd)

Immunity Test	IEC 60601–1–2 Test Level	Compliance Level	Electromagnetic Environment
Electrical fast transient/burst IEC 61000–4–4	2 kV for power supply lines 1 kV for input/output lines	2 kV for power supply lines 1 kV for input/output lines	Mains power quality is that of a typical commercial and/or hospital environment
Surge IEC 61000–4–5	1 kV line(s) to lines(s) 2 kV line(s) to earth	1 kV line(s) to lines(s) 2 kV line(s) to earth	Mains power quality is that of a typical commercial and/or hospital environment.
Voltage dips, short interruptions and voltage variations on power supply input lines IEC 61000–4–11	0 % U_n for 5 sec	0 % U_n for 5 sec	Mains power quality is that of a typical commercial and/or hospital environment. If the user of the Innova system requires continued operation during power mains interruptions, it is recommended that the Innova system be powered from an uninterruptible power supply or a battery.
Power frequency (50/60 Hz) magnetic field IEC 61000–4–8	3 A/m	3 A/m 1A/m	Power frequency magnetic fields are at levels characteristic of a typical location in a typical commercial and/or hospital environment. At that disturbance amplitude level the monitor image might present some slight flicker. For image quality improvement, the monitor might be removed from the low frequency magnetic field source vicinity. At that disturbance amplitude level the system is fully operational.
Note: These are guidelines. Actual conditions may vary.			

2.4.3.2 Electromagnetic Immunity IEC 60601–1–2

The Innova system is suitable for use in the specified electromagnetic environment. The purchaser or user of the Innova system should assure that it is used in an electromagnetic environment as described below:

Table 3-9:

Immunity Test	IEC 60601-1-2 Test Level	Compliance Level	Electromagnetic Environment
			Portable and mobile RF communications equipment are used no closer to any part of the Innova system, including cables, than the recommended separation distance calculated from the equation appropriate for the frequency of the transmitter.
Conducted RF IEC 61000-4-6	3 V, 150 kHz to 80 MHz	[$V_{1=}$] 0.3 V	At that disturbance amplitude the monitor image might present some slight flicker. For image quality improvement, the monitor might be removed from the electric field source vicinity.
		[$V_{2=}$] 0.3 V	At that disturbance amplitude the system is fully operational.
Radiated RF IEC 61000-4-3	3 V/m, 80 kHz to 800 MHz	[$E_{1=}$] 0.3 V/m	At that disturbance amplitude the monitor image might present some slight flicker. For image quality improvement, the monitor might be removed from the electric field source vicinity.
		[$E_{2=}$] 0.3 V/m	At that disturbance amplitude the system is fully operational.
	3 V/m, 800 MHz to 2.5 GHz	[$E_{3=}$] 0.3 V/m	At that disturbance amplitude the monitor image might present some slight flicker. For image quality improvement, the monitor might be removed from the electric field source vicinity.
		[$E_{4=}$] 0.3 V/m	At that disturbance amplitude level the system is fully operational.
			Note: P is the power rating of the transmitter in watts (W) according to the transmitter manufacturer and d is the recommended separation distance in meters (m).
			Field strengths from fixed RF transmitters, as determined by an electromagnetic site survey,* are less than the compliance level in each frequency range.**
			Interference may occur in the vicinity of equipment marked with the following symbol:

NOTE: * Field strengths from fixed transmitters, such as base stations for cellular telephones and land mobile radios, amateur radio, AM and FM radio broadcast, and TV broadcast cannot be estimated accurately. To assess the electromagnetic environment due to fixed RF transmitters, an electromagnetic site survey should be performed. If the measured field strength exceeds the RF compliance level above, observe the Innova system to verify normal operation in each use location. If abnormal performance is observed, additional measures may be necessary, such as re–orienting or relocating the Innova system

** Over the frequency range 150 kHz to 80 MHz, field strengths are less than [V_2] V/m.

The Recommended Separation Distances are listed in Table 3-10 .

These are guidelines. Actual conditions may vary.

2.4.3.3 Recommended Separation Distances for Portable and Mobile RF Communications Equipment IEC 60601–1–2

Table 3-10:

Frequency of Transmitter	150 KHz to 26 MHz	26 MHz to 80 MHz	80 MHz to 800 MHz	800 MHz to 2.5 GHz
Equation	$d = [3.5 / V_2]\sqrt{P}$	$d = [3.5 / V_2]\sqrt{P}$	$d = [3.5 / E_2]\sqrt{P}$	$d = [3.5 / E_4]\sqrt{P}$
Rated Power of Transmitter (watts)	Distance (meters)	Distance (meters)	Distance (meters)	Distance (meters)
10 mW	1.2	1.2	1.2	2.3
100 mW	3.8	3.8	3.8	7.3
1	12	12	12	23 (*)
10	38	38	38	73
100	120	120	120	230

For transmitters rated at a power not listed above, the DISTANCE can be estimated using the equation in the corresponding column, where P is the power rating of the transmitter in watts (W) according to the transmitter manufacturer.

NOTE: These are guidelines. Actual conditions may vary.

2.4.4 Limitations Management

Adhering to the distance separation recommended in Table 3-10 , between 150 KHz & 2.5 GHz, will reduce disturbances recorded at the image level, but may not eliminate all disturbances. However, when installed and operated as specified herein, the system will maintain its essential performance by continuing to acquire, display, and store diagnostic quality images safely.

For example, a 1W mobile phone (800 MHz to 2.5 GHz carrier frequency) shall be put 23 meters (see (*) Table 3-10) apart from the Innova system (in order to avoid images interferences risks).

2.4.5 Use Limitation

The use of accessories, transducers, and cables other than those specified may result in degraded ELECTROMAGNETIC COMPATIBILITY of the Innova system

2.4.6 Installations Requirements & Environment Control

NOTICE

In order to minimize interference risks, the following requirements shall apply:

- **Cables shielding & grounding:**
  All interconnect cables to peripheral devices must be shielded and properly grounded. Use of cables not properly shielded and grounded may result in the equipment causing radio frequency interference.
- **Separated Power supply distribution panel & separated power line:**
  - **This product complies with the radiated emission limits as per the CISPR11 Group1 ClassA standard.**
  - **The Innova system is predominantly intended for use (e.g. in hospitals) with a dedicated supply system, and with an X–ray shielded room.**
  - **In case of using in a domestic environment (e.g. doctors' offices), in order to avoid interferences, it is recommended to use a separated AC power distribution panel & separated power line, and an X–ray shielded room.**
- **Subsystem & accessories Power supply distribution:**
  All components, accessories subsystems, systems which are electrically connected to the Innova system, have to be all AC power supplied by the same power distribution panel & line.

NOTE: **In order to avoid interferences, the same AC power distribution panel should supply all components, accessories, the Innova system (& subsystems as the Advantage Workstation). The separated AC power line should supply the panel.**

- **Stacked components & equipment:**
  The Innova system should not be used adjacent to or stacked with other equipment; if adjacent or stacked use is necessary, the Innova system should be observed to verify normal operation in the configuration in which it will be used.
- **Low frequency magnetic field:**
  In case of an Innova system, the Gantry (digital detector) shall be apart 1 meter from the generator cabinet, and 1 meter apart from the analog (CRT) monitors. These distances specifications shall minimize the low frequency magnetic field interference risk.
- **Static Magnetic Field Limits : The Innova system is compatible with the Earth magnetic Field. Earth magnetic Field is lower than 1 Gauss.**
- **Electrostatic discharges environment & recommendations:**
  - **In order to reduce electrostatic discharge interference, install a charge dissipative floor material to avoid electrostatic charge buildup.**
  - **The relative humidity shall be at least 30 percent.**
  - **The dissipative material shall be connected to the system ground reference, if applicable.**

NOTICE

Route separately EMI filter incoming power lines and outgoing power lines (refer to *Electrical Connections*).

NOTE: The maximum distance between the EMI filter and the PDB is 3 m.

NOTE: The Fluoro UPS (CE) option requires an EMI filter box placed upstream the PDB. The EMI filter box will be delivered as a single product by GE Consumer & Industrial. For further information on the EMI filter box , see *Typical EMI Filter box* in Chapter 6, Section 2,

2.5 Radiation Protection

Because x–ray equipment produces radiation, special precautions may be needed or special site modifications may be required. The General Electric Company does not make recommendations regarding radiation protection. It is the purchasers' responsibility to consult a radiation physicist for advise on radiation protection in x–ray rooms.

2.6 Audible noise

- Less than 50 dB (A) at 1 meter for an Innova LC Positioner.
- Limited to 50 dB (A) at 1 meter for Omega IV, Omega V and Tilt tables.
- Limited to 55 dB (A) at 1 meter for C2 Cabinet.
- Limited to 60 dB (A) at 1 meter for the COOLIX 4000.
- Limited to 65 dB (A) at 1 meter for C1 Cabinet.
- Limited to 60 dB (A) at 1 meter for Digital Detector Chiller Thermo–Tek.
- Limited to 52 dB (A) (background of 35 dB (A)) at 1 meter for Digital Detector Chiller Thermo–Con.
- Less than 50 dB (A) at 1 meter for a DL LCD monitor.
- Less than 60 dB (A) at 1 meter for the Fluoro UPS.

NOTE: Noise generated by system cabinets all together is 70dB. If cabinets are installed too close to the exam room (e.g. behind sliding doors) appropriate measures have to be implemented during the pre-installation to effectively reduce noise in the exam room.

2.7 Windows and curtains

When the examination room has a window with an aperture outside of the controlled light area (day light, other...) a curtain has to maintain the light intensity under a limit fixed to 150 lux.

3 Structural Requirements

3.1 Room Size

For Room size dimensions, refer to Chapter 4, Section 2, Room Layout Drawings.

For additional details, refer to Chapter 4, Section 1, Room Layout Considerations.

3.2 Door Size Requirements

Minimum door sizes also apply to hallways and elevators. For additional details, refer to Chapter 7, Section 1, Shipping Information.

3.2.1 Door Height

The minimum door height (to accommodate Innova positioner on its dolly) is **1.980 m** (78 in). If the height is limited to 2 m (79 in), you will need a fall over cabinet.

3.2.2 Door Width

The minimum door width needed (to accommodate the Innova LC shipping dolly) is:

- 1.165 m (46 in) with protective side rail,
- 1.096 m (43 in) with one protective side rail removed on site.

NOTE: Door widths are based on a *straight–in* approach requiring a 2.44 m (96 in) wide corridor. Calculations need to be made for accommodation of equipment through narrower corridors.

3.3 Floor

3.3.1 General Vascular GEMS Policy

GEMS's Customer is responsible for the structural analysis and mounting of the base plates. If GEMS is forced to mount the base plate, the LCT must hire a structural engineer to design and approve the mounting method and provide GEMS with an engineering report.

The floor level cannot exceed a general levelness of 5 mm (0.2 in) for any 2 meters (79 in).

NOTICE

The floor slabs on which the equipment is to be installed must have a levelness of 1 mm (0.04 in) per meter (40 in). Position of baseplates and table basement depends on the type of installation. The two types of installation are given in Illustration 3-2 .

NOTICE

The Table baseplate or the System baseplate are mandatory to install the table (patient support).

The Table must never be installed on grade.

Illustration 3-2:

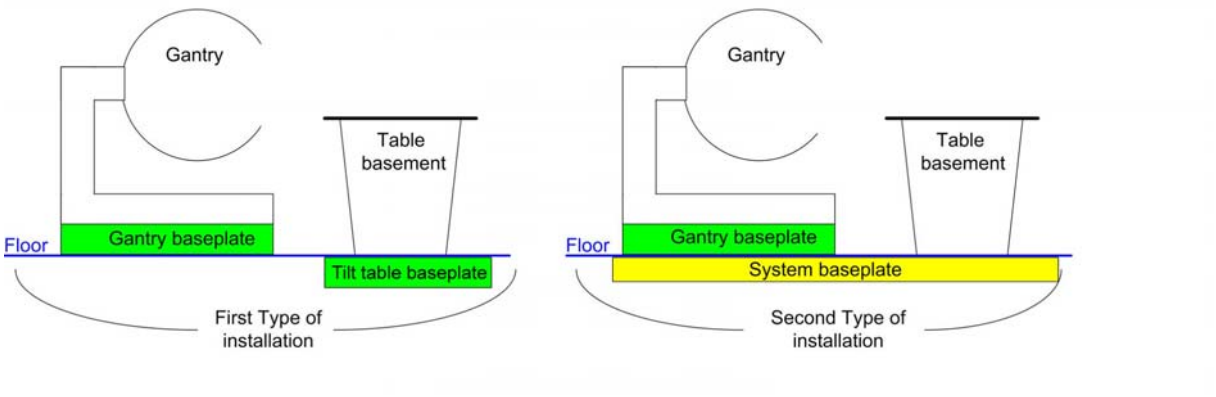

The preferred installation method for the Innova LC Positioner or the Omega tables is through-bolting. The through-bolting method can be used in all seismic zones. If through-bolting cannot be used, use provided floor anchors instead.

Illustration 3-3: Through–Bolt Supplied (Slab Type Floor Construction)

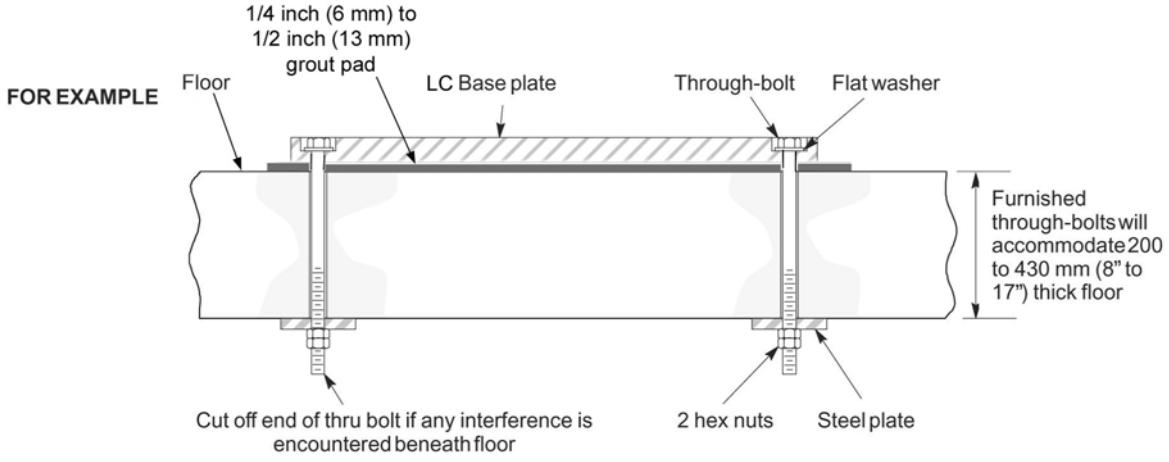

3.3.2 Floor requirements when using provided floor anchors

The maximum pullout force per provided anchor was calculated assuming:

- A concrete compression strength of **17.24 MPa** at 28 days (which is the minimum required compression strength).
- Anchors installed to the required hole depth of **165.1 mm** minimum, and
- Center of anchor hole to concrete edge distance **79.4 mm**.

Make sure to obtain data on compression strength of the concrete before using floor anchors.

3.3.3 Pan Type Floor Construction Requirement

For Pan type floor construction, steel channels must be designed by a local structural engineer to span floor joists. See Illustration 3-4 .

NOTE: For specific floor preparation procedures, refer to PIM Innova 2000/2100–IQ/3100/4100 Cardiovascular Imaging System Pre–Installation Kit Installation Procedures.

Illustration 3-4: Through–Bolt Supplied (Pan Type Floor Construction)

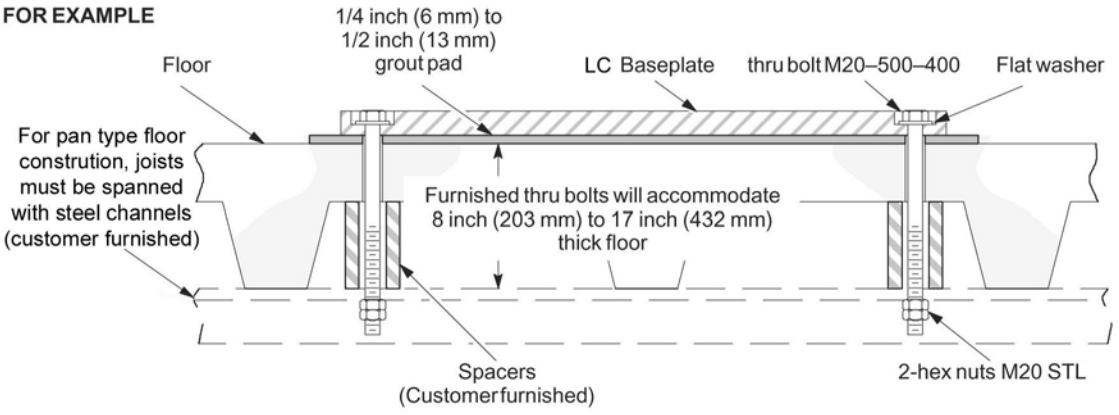

Illustration 3-5: Table floor mounting layout

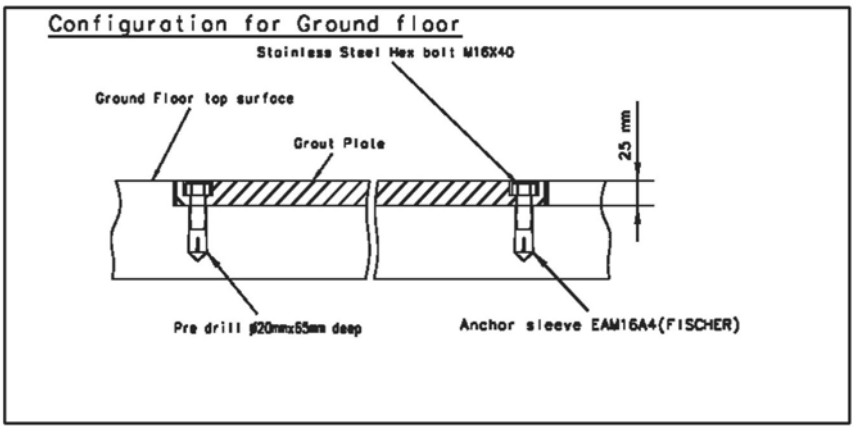

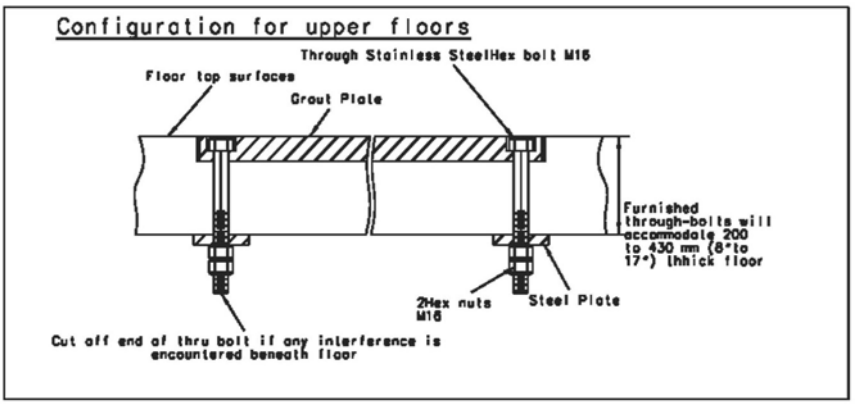

NOTICE

Prepare the floor such that the Tilt Table base plate will be flush with the floor finish surface, taking into account the thickness of the floor finish material.

For alternative table bolts or seismic area, refer to template drawing shown in Illustration *Innova LC Positioner And Table Floor Mounting Template* contained in Chapter 5, Section 2, Mounting Requirements.

3.3.4 Hole dimension and preferred location in concrete floor

In the examination room, the Innova LC Positioner is not placed on a computer floor but directly put on concrete floor, the location of the cable access needs to be carefully planned.

Otherwise, if the cable run is located under the concrete floor, the cables will have to come through the floor and in this case you will need two holes, one for the LC Positioner and the other for the patient table.

The diameter of both holes must be the same 225 mm or 9 in.

Illustration 3-6: Hole location in concrete floor

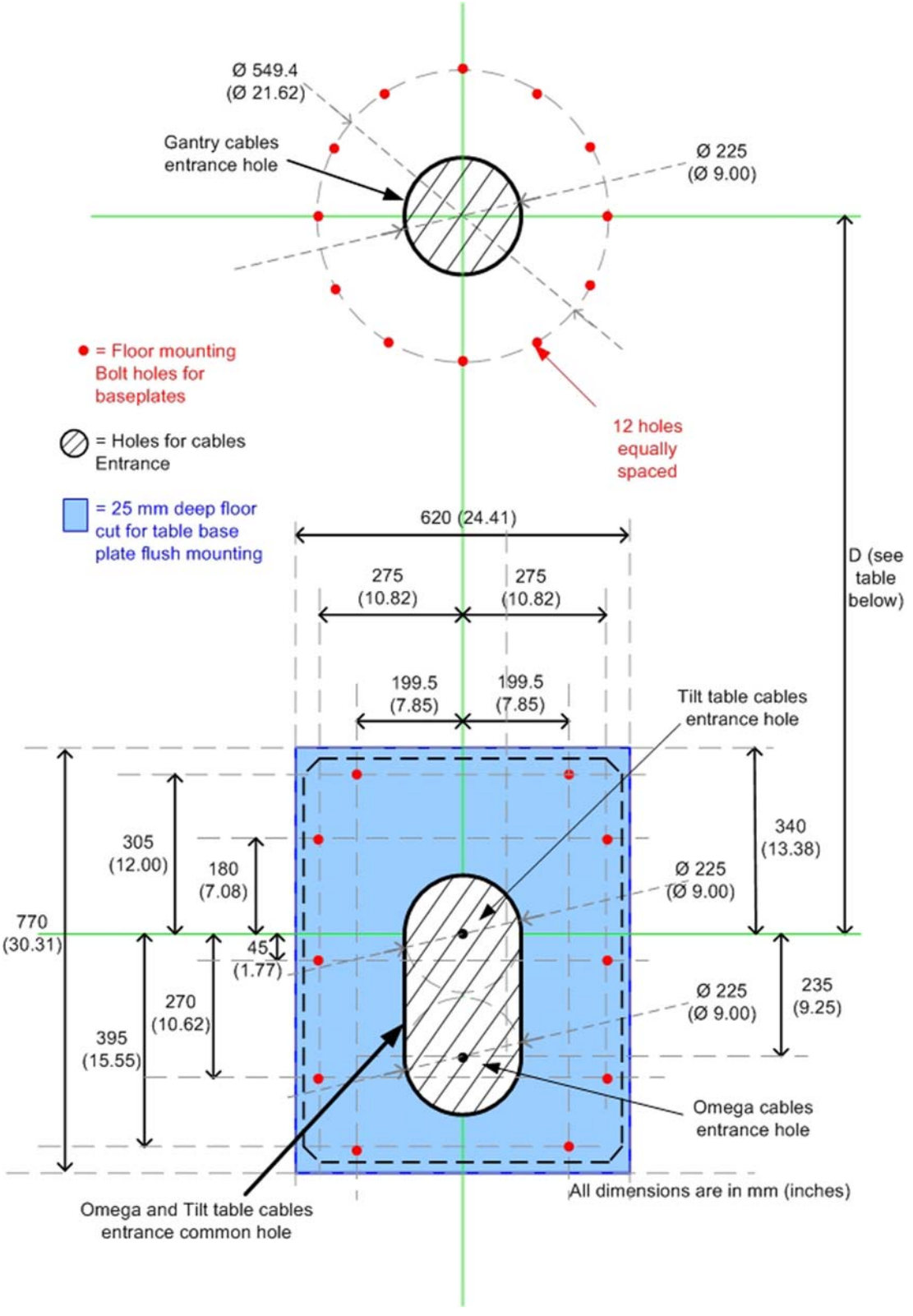

Table 3-11: D distance

	ANGIO / CARDIO	CARDIO / NEURO
Omega IV Compact	NA	1395 mm (54.9 in)
Omega V Long	1278 mm (50.3 in)	1395 mm (54.9 in)
Omega V non motorized Long	1278 mm (50.3 in)	1395 mm (54.9 in)
Tilt Table	1278 mm (50.3 in)	1278 mm (50.3 in)

NOTE: * in case of an upgrade, the Tilt Table is positioned at same position as the replaced Omega Table.

NOTICE

Due to the plastic bushing used in the USA to protect cables from the sharp edges of conduits it is necessary to place the cable conduit inside the table cable access opening but the height of the outcoming conduit plus bushing is limited to 1/2 in (12.7 mm).

NOTE: Refer to table *Chemical anchors Pull out efforts and recommendations* in Chapter 5, Section 2, Mounting Requirements for pull out effort on each fixation bolts.

3.3.5 Water Pipe Requirements

- An Innova LC System uses a Performix 160 A X–Ray tube with a recirculating chiller.
- Two water hoses are supplied to allow water circulation between Innova LC Positioner and chiller.
- In some countries, it is forbidden to run electrical cables and water pipes in the same conduit. In this case, two separate conduits are required. But then a problem arises at the level of the Innova LC Positioner entrance.
- Depending on the method used, one of the two options shown hereafter (Illustrations Illustration 3-7 and Illustration 3-8) must be used.

Illustration 3-7: Water Conduit location

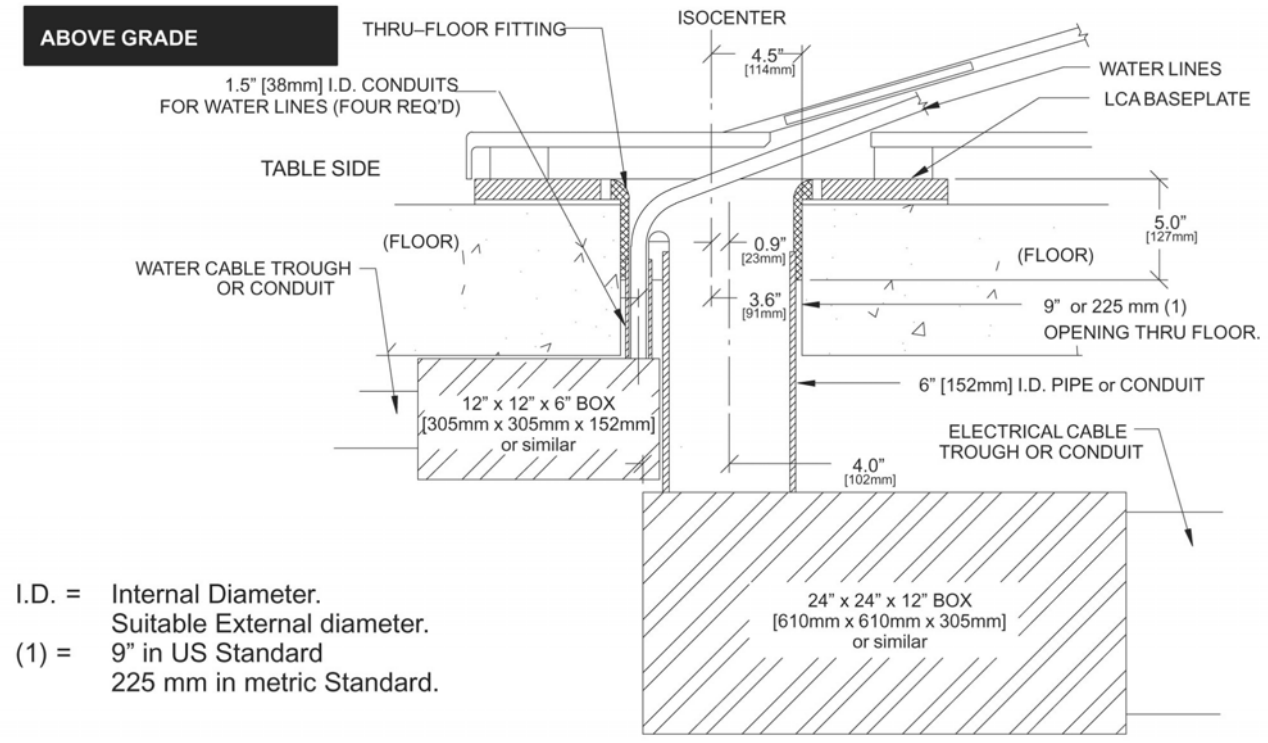

I.D. = Internal Diameter.
Suitable External diameter.
(1) = 9" in US Standard
225 mm in metric Standard.

Note: Pipe, junction box and duct or conduit are to be supplied and installed by Customer or customer's Contractor.

NOTICE

In some countries, depending on local regulations, it may be forbidden to run electrical cables and water pipes in the same conduit. In this case, two separate conduits are required.

Illustration 3-8: Water Conduit location

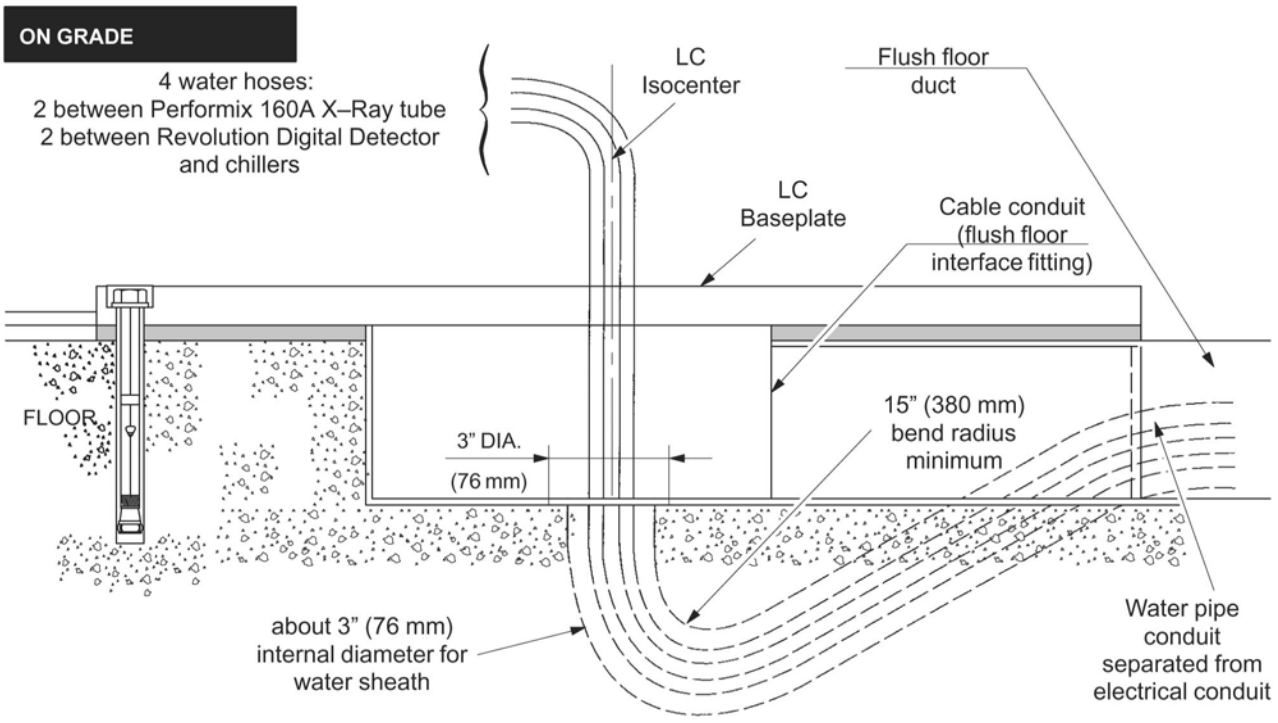

Note: Flush floor interface fitting is part of GEMS installation kit 2286398 and is installed by Customer or customer's Contractor.

Illustration 3-9: Cable Curvature

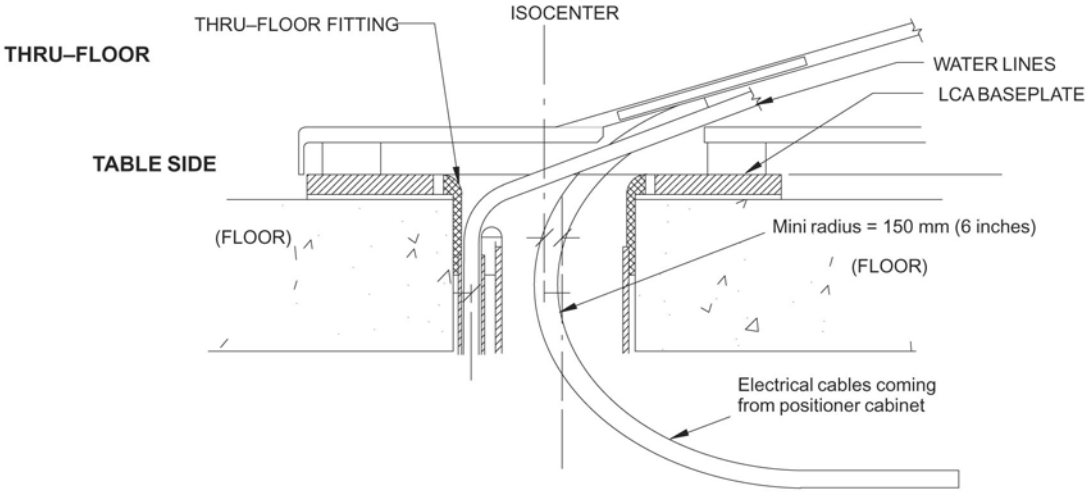

Note: In case of thru–floor cabling, if the electrical cables are coming from the head side, they will need to have a minimum curvature with a minimum radius of 150 mm (6").
In any other cases (i.e. flush floor) no such curvature is allowed.

Illustration 3-10: Cable Curvature

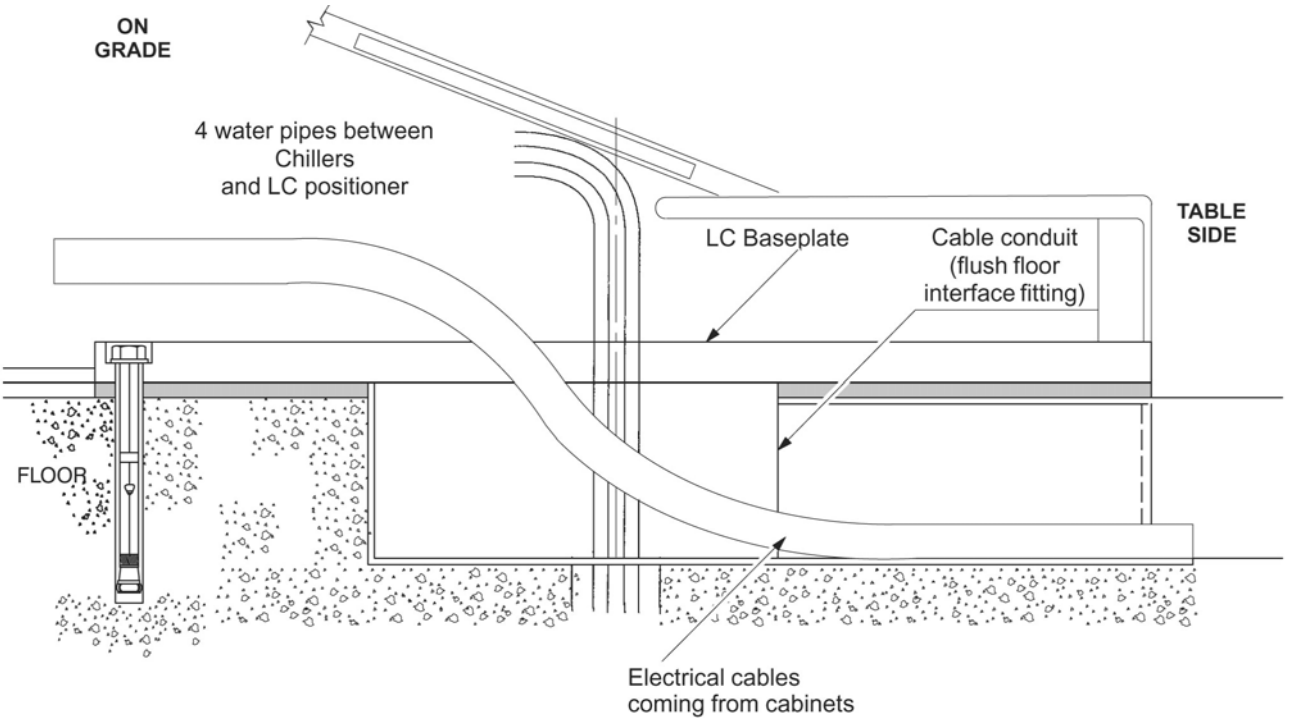

NOTE: In case of on grade cabling, because of the minimum curvature constraint of 150 mm (6”), the cable will have to come from the side between Innova LC Positioner and patient table.

3.3.6 Seismic areas

Chiller: The seismic kit for Lytron is included with the chiller when shipped.

In Seismic areas all cabinets must be anchored to the floor. See Chapter 2, Section 3, Basic Innova LC System Compatibility for referential documents. C1 & C2 Cabinets: Wall support 2285242.

Every sub–system is delivered on site with its proper seismic kit.

- Monitor Flat Panel Seismic Kit: 2353317
- VCIM seismic kit: 2365510.

Anti–seismic means be installed before opening the system for normal use.

Refer to Calculations for Seismic Anchoring Information.

3.4 Ceiling

Aluminum rails support the In–Room Monitor bridge used in Innova system X–ray rooms.

Reference:

For additional details on ceiling requirements for stationary rails, refer to: - Direction 46–019639, *Advantx (VHLA) XT Stationary Rails Installation and Adjustment*.

When evaluating ceiling you must take into account the following mounting information:

3.4.1 Rail Mounting

Attach stationary rails to structural steel with through-bolts in concrete ceilings. Do not use screw anchors in direct tension.

Mount stationary rails directly to the ceiling slab or to flush–mounted unistrut or halfen structure. In higher rooms with false ceiling, mount stationary rails to rigid vertical members hung from ceiling slab.

Securing a supplementary channel to the bottom of the vertical members and mounting the stationary rails to this channel can greatly reduce the number of vertical members.

The stationary rail support structure must be leveled before installation can begin. Do not assume that any support structure is level within specified tolerances, particularly after removing suspensions from an existing room.

3.4.2 Bolt Specifications

- The maximum load per bolt will not exceed **1557 N**.
- Each bolt must not “pull out” or otherwise fail under a vertically downward *dead* load of **6227 N**.

3.4.3 Select Rails

All XT Stationary rails are with a select length process. Detail of available length is illustrated in Chapter 7, Section 4, European Process Order Select.

Illustration 3-11: SPECIFICATIONS FOR A TYPICAL 17'–10" (5.44 M) INBOARD STATIONARY RAIL MOUNTING INTERFACE (BOTH RAILS CEILING MOUNTED)

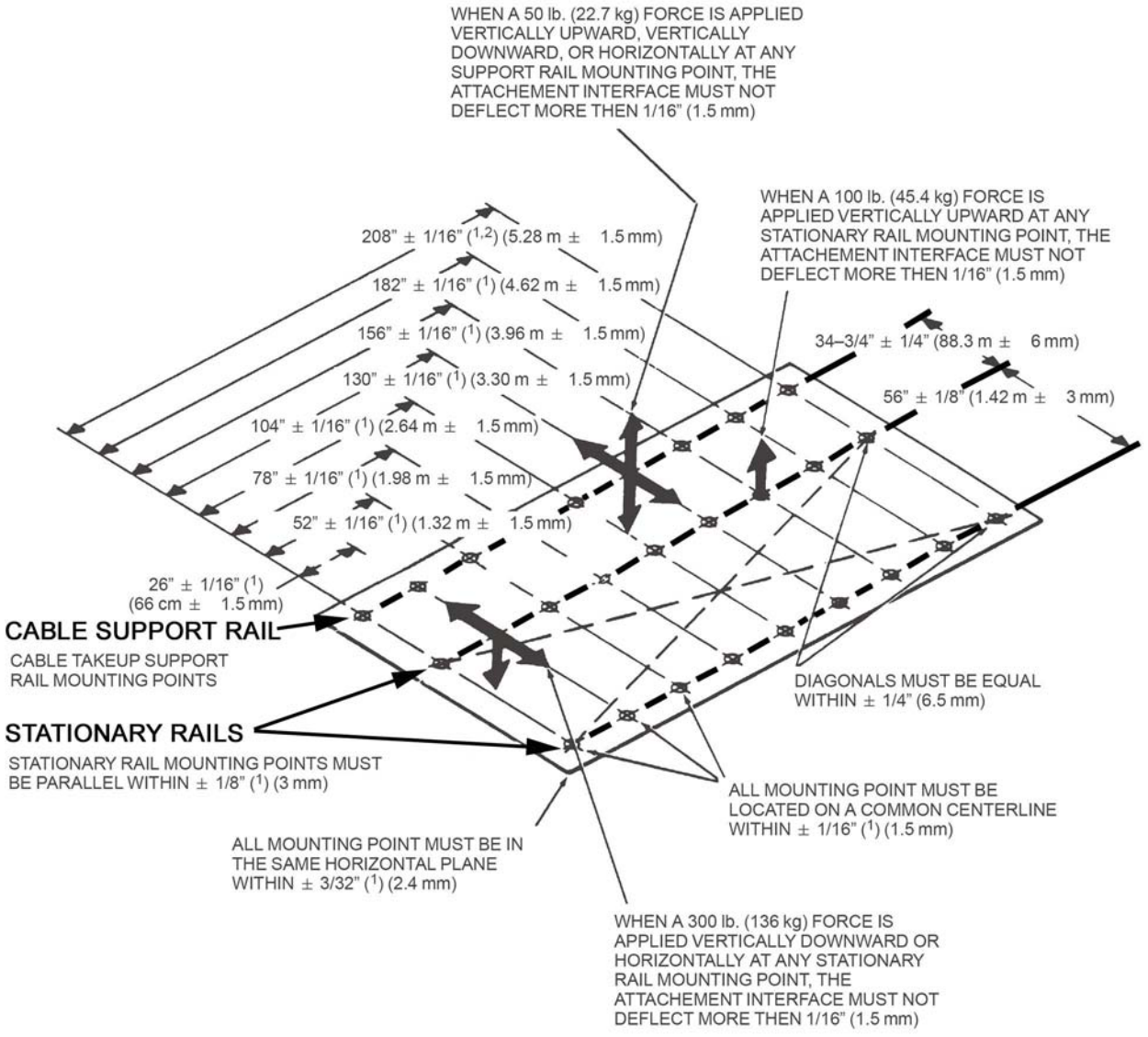

NOTES: 1. NONE CUMULATIVE ERROR.
2. SPACE BETWEEN LAST 2 HOLES MAY BE LESS THAN 26" (66 cm)

Table 3-12: Stationary rail in different length

Rail length mm (ft)	A	C	D	INBOARD RAILS
4,724 (15'6")	7*660.4=4,623		51	B0186JA
5,639 (18'6")	8*660.4=5,283	254	51	B0222JA
5,791 (19')	8*660.4=5,283	406	51	B0228JA

3.4.4 Boom Mounted for Monitor Suspension

One type of boom mounted is supplied as counterpoised monitor suspension not adjusted on site as follows:

- for 2 x 21” (53 cm) EIZO GmbH (formerly Siemens) flat panel 21” (Hi–bright) and additional AW NEC monitor.

Illustration 3-12: Recommended locations for 3 monitor suspension

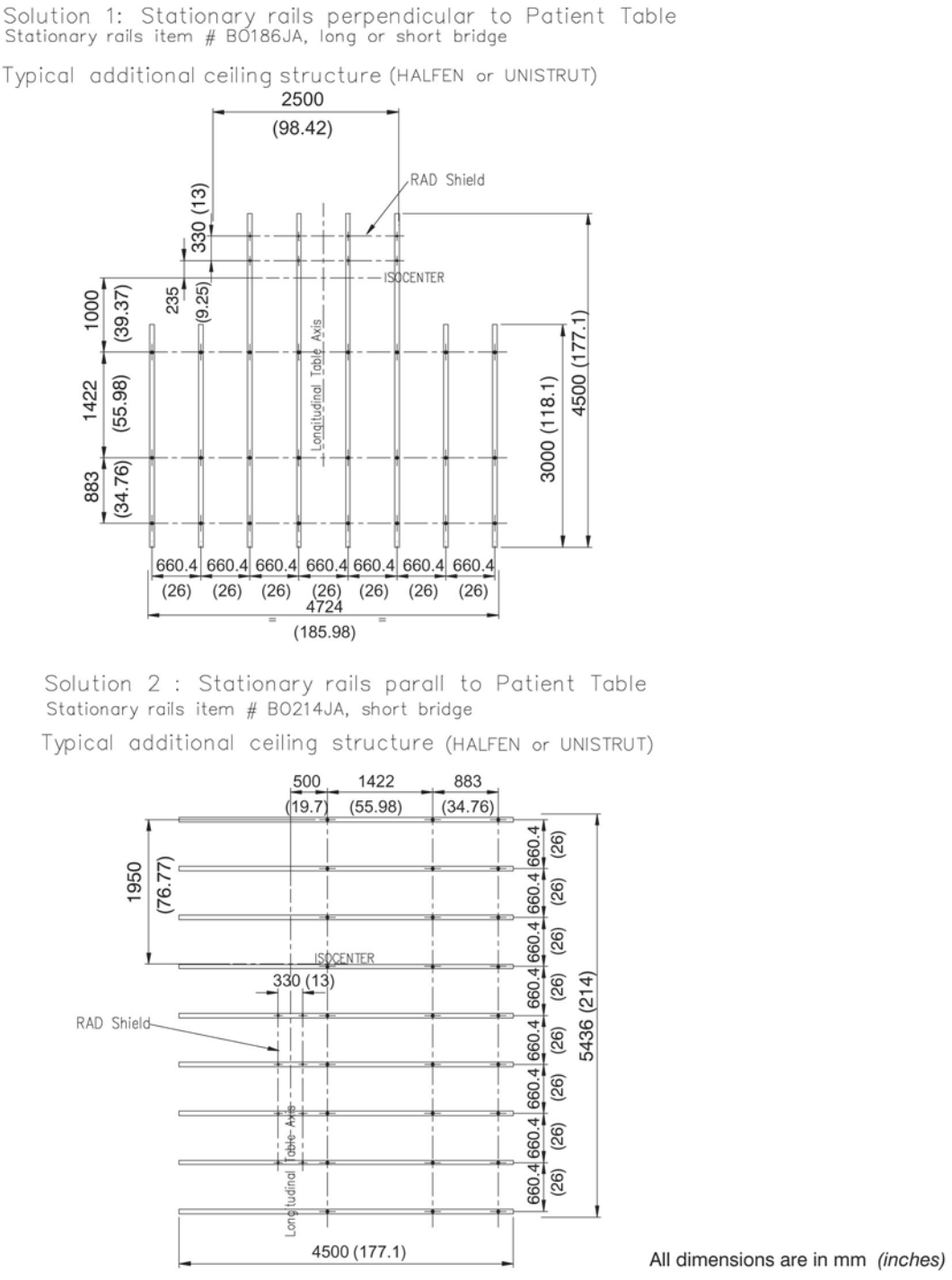

NOTICE

A recommended location for 3 monitor suspension is defined to avoid a risk of obstruction to operators.

3.4.5 Cable Support for Monitor Cables

A cable support (cable drape) is provided with an Innova LC System.

The cable support kit contains:

- 1 B2054 EK (Drape with 3 M Bridge, on suspensions for X-Ray tubes and monitors, contains 8 FT 6 inch track, three carriers, and mounting hardware)
- 1 B2055 ED (stationary rail parts)

NOTE: In Americas the Cable Support Kit must be provided locally by the Customer (e.g. CPGE55 from Unistrut).

3.5 Walls

3.5.1 General requirement

The C1 Cabinet, the C2 Cabinet, and the PDB Cabinet must be securely fastened to the wall to prevent them from tipping.

3.5.2 Seismic Areas

NOTE: For Fluoro UPS option (US version only), the Fluoro UPS supplier will deliver anchoring brackets (see Illustration 3-13). The bolts will be provided by the customer.

Consider local seismic codes when planning cabinet mounting. Consult seismic expert to determine which mounting method is appropriate for the seismic region. Certain seismic regions require additional reinforcement in walls. See Chapter 2, Section 3, Basic Innova LC System Compatability for referential documents.

Illustration 3-13:

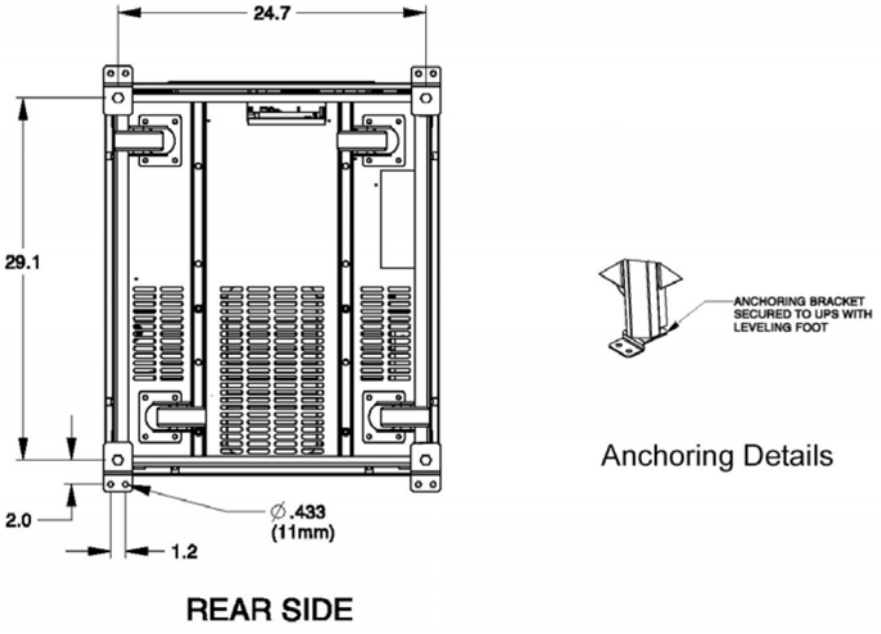

Refer to Calculations for Seismic Anchoring Information.

4 Functional Requirements

4.1 Electrical Requirements

Innova System require two specific power lines, two three phase for C1 cabinet (see Illustration *AC Interconnect without Fluoro UPS* in Chapter 6, Section 1, Power Distribution).

Connect the main power demand to the X–Ray generator – Jedi (C1 cabinet).

X–Ray generator is feed by a 126 kVA three phase power line.

For Generator Power Supply Features, see ref 60601.1 IEC.

NOTE: In CE configuration, C2 cabinet is fed by C1 cabinet.

Table 3-13: ELECTRICAL REQUIREMENTS: System line voltage without Fluoro UPS

Peak Max Power input (kVA)	Frequency (Hz)	Mains Voltage (V)	Max. Line Impedance (ohms)	Peak Current (A)	Average Current (A)	Mains Wire
150	50 or 60	380 to 480 (3 ph, ± 10%)	0.09 to 0.12	228 to 180 for C1	16 to 13	4 wires (3 ph + GND).

Table 3-14: ELECTRICAL REQUIREMENTS: System line voltage with Fluoro UPS UL

Peak Max Power input (kVA)	Frequency (Hz)	Mains Voltage (V)	Max. Line Impedance (ohms)	Peak Current (A)	Average Current (A)	Mains Wire
150	60	480 (3 ph + N, ±10%)	0.09 to 0.12	180 for C1	13	5 wires (3 ph + N + GND)

Table 3-15: ELECTRICAL REQUIREMENTS: System line voltage with Fluoro UPS CE

Peak Max Power input (kVA)	Frequency (Hz)	Mains Voltage (V)	Max. Line Impedance (ohms)	Peak Current (A)	Average Current (A)	Mains Wire
150	50 or 60	380/400/415 (3 ph + N, ±10%)	0.09 to 0.12	228 for C1	16	5 wires (3 ph + N + GND)

NOTE: PDB (CE) maximum rating is equal to 57 kVA.

PDB (UL) maximum rating is equal to 124 kVA.

NOTICE

Line impedance should be compliant with IEC 601.2.7 Refer to the table *Max Line Impedance for feeder line between Generator cabinet and Hospital* in Chapter 6, Section 4, Power and Grounding Requirements.

NOTICE

When a Fluoro UPS is or will be installed, a Neutral line is mandatory. An IT or Delta configuration power input requires the installation of an isolation transformer (see transformer specification below)..

For **C2 Cabinet** there are two positions for the shunts:

- First position if input AC supply is between 323 VAC and 420 VAC.
- Second position if input AC supply is between 420 VAC and 528 VAC.

For **Chiller** the voltage range is:

- 342 VAC (323 VAC for less than 3 seconds*) to 418 VAC*, 50 Hz if the switch is on 50 Hz.
- 432 VAC (408 VAC for less than 3 seconds*) to 528 VAC*, 60 Hz if the switch is on 60 Hz.

NOTE: * A voltage drop may occasionally occur at startup and during operation.

NOTICE

If the main power supply is outside this range, a 6 KVA autotransformer must be used to supply the Chiller.

Examples:

- With a main power supply at 480 VAC/50 Hz, use an autotransformer to supply the Chiller at 380 VAC/50 Hz,
- With a main power supply at 360 VAC/60 Hz, use an autotransformer to supply the Chiller at 480 VAC/60 Hz.

For **PDU : C1 Cabinet** the voltage range is:

- 380 VAC (+10 % to – 20 %) – PDU setting 342 – 394 VAC.
- 410 VAC (+10 % to – 20 %) – PDU setting 394 – 444 VAC.
- 480 VAC (+10 % to – 20 %) – PDU setting 444 – 528 VAC.

NOTICE

(For US only)

A purchable option I–sense (catalog number E4504B) allows to monitor the hospital main power line. it is recommanded to install this option everywhere RMS and waveform variation events can impact the standard behaviour of the system.

The I–Sense power monitor can be installed at the imaging equipment sub–panel (between the hospital transformer and the PDB) or the main distribution panel in the facility. Placement will depend on the monitoring needs of the facility.

I–sense is connected to each phase conductor and the ground. An analog telephone line also needs to be connected to the I–Sense unit. It is recommanded to dedicate one telephone line to I–sense.

4.2 Room Speaker

If the VCIM tone cannot be heard from the exam room, a remote loud–speaker must be installed in that room; the loud–speaker, which must be purchased locally, has to be compliant with the local legal requirements (if any; e.g. CE Marking for EEC).

The loud–speaker is to be connected to the handswitch support which provide a type 3.5 mm Jack plug for connecting external audio device.

4.3 Room Lighting

See Illustration Room Lighting for Innova System in Chapter 4, Section 2, Room Layout Drawings, for a recommended room lighting layout for an Innova LC system.

Requirements for lighting

Requirement for lighting concern the following, general, light–technique characteristics:

- Illuminator level.
- Lighting distribution.
- Preventing the operator from being dazzled by the light (by direct light sources or by reflection on bright objects).

The Illumination level must be compliant with established lighting technical rules and be as constant as possible.

5 Emergency

During an examination, any operator can encounter two main cases of failures.

5.1 Main power supply cut

In this case, refer to Chapter 6, Section 16, Physical Runs.

5.2 System failure

When the system fall into failure with a patient on table during an examination, the operator can require a help with a Surgical Imaging mobile unit to finish the examination.

In this case a wall outlet single phase + ground is required to feed the mobile. It is also requires a free space around the patient table to proceed with the mobile instead of Innova LC Positioner. The table has to rotate to 90º.

Refer to illustration *Room Layout for Innova System (Digital Mobile Imaging System 9800)* contained in Chapter 4, Section 2, Room Layout Drawings for a surgical imaging mobile use.

6 Insite/Network Connection

The preferred Insite connection uses a broadband modem. This connection requires a dedicated Ethernet Jack (RJ45) that must be located less than 1 meter (3 feet) from the C1 cabinet

For complete descriptions of these connectivity solutions, please refer to the Broadband Solutions catalogue available through your local GEHC sales and service representative.

Connectivity Process and pre-installations checklists are available in the Broadband Connectivity PIM available through your local GEHC sales and service representative

Optionally, the analog modem is also fitted inside the C1 cabinet. A dedicated phone line with a local socket used only for a connection to a modem will preferably be located close to the cabinet. The phone outlet must be located less than 1 meter (3 feet) from the C1 cabinet

A modem compliant to each country is supplied with the Innova System.

InSite requires an Internet Address connecting it to the Innova System. This address must be available before installing the system. A request form has been defined. For more information, please refer to Chapter 8, Section 1, IP Addressing Process or contact your GEMS OLC representative.

For network requirements for IVUS option, see the section *Ethernet Network Requirement* in Chapter 4, Section 3, IVUS Option.

NOTICE

The C1 cabinet comes equipped with a Firewall unit. The hospital network must be capable of connecting to this firewall. In the case that it cannot be, please contact GE Healthcare to discuss alternatives.

Chapter 4 Room Layouts

1 Room Layout Considerations

1.1 Radiation Protection

Because X–Ray equipment produces radiation, you may need to take special precautions or make special site modifications. The General Electric Company does not make recommendations regarding radiation protection. It is the purchasers' responsibility to consult a radiation physicist for advise on radiation protection in x–ray rooms.

1.2 Service Access

Allow appropriate space for service access of equipment. Consult component pre–installation directions for clearance information.

1.3 Clinical Access

Make sure that you plan the room with the following clinical access requirements:

- Provide easy access to the patient table. Stretchers and other mobile hospital equipment must reach the table quickly.
- The layout of the table in the room (PIM) shall make a provision so that the clearance between the maximum table position (head side) on system axis and any object in the room (e.g.: wall, device) be greater than 50 cm (19.7 in)or 65 mm (25.6 in) if the Header Extender is used), taking into account the fact that the Tilt table can rotate 180°.
- Provide sufficient space around the patient table for the unimpeded conduct of CPR (Cardiac Pulmonary Resuscitation). With the table in this position, the table must be capable of rotating +/- 45°
- Clinicians at the patient table must be able to communicate with assistants in the control area.
- There must be an unrestricted view of the video monitors and physiological monitoring equipment from the vascular table.
- Operators in the control area must have easy access to the control console. However, position the controls (including handswitches) so that the operator cannot take exposures while looking around or standing outside the control booth's lead glass window.
- Operators in the control area must have easy access to video recorders and injector programmers, film and video storage cabinets, and service and operating manuals.
- Consult customer on the number and location of nonelectrical lines (air, oxygen, vacuum, water, etc.) in the vascular room.

1.4 Peripheral Equipment

Consult hospital personnel regarding additional space requirements for the following types of hospital equipment:

- Storage cabinets.
- Sinks.

- Oxygen stations.
- IV apparatus.
- Injectors.
- Heart monitoring equipment.
- Crash cart.

1.5 Emergency Stop

Protect the Emergency Stop from accidental actuation.

1.6 Patient Environment Equipment

The components that may be installed within patient vicinity need to be medical equipment (”patient vicinity is defined in the standardization as a space within the room 1.83 m (70.7 in) beyond the perimeter of the examination table and extending vertically 2.29 m (90.2 in) above the floor.”). For the Innova System, the equipment are:

- Table
- C–arm
- Monitors
- Injector

1.7 Preference Cabinet locations

Illustration 4-1:

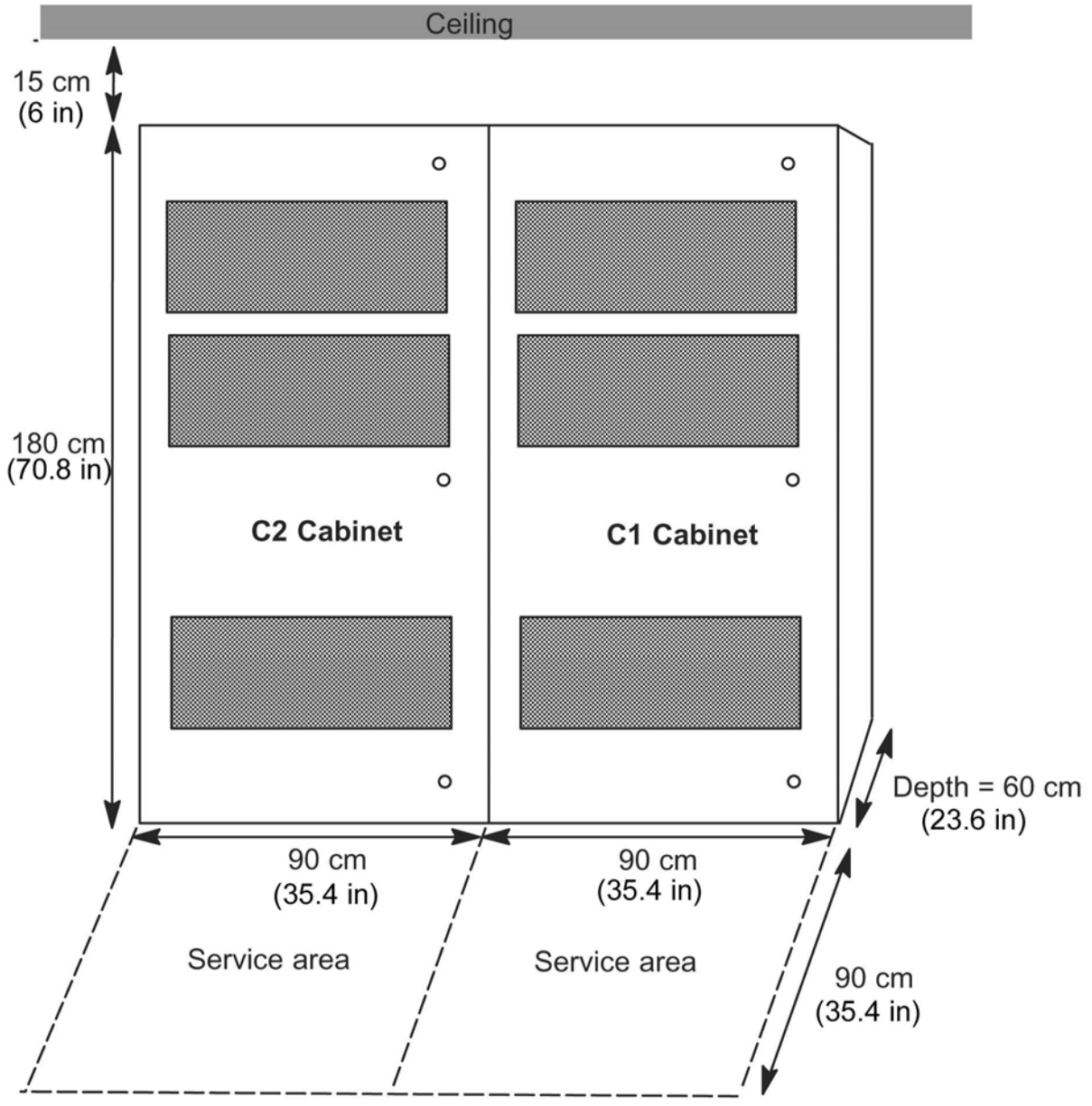

C2 cabinet weight = 258 kg C1 cabinet weight = 452.5 kg

CAUTION

The service area dimensions shown above are just an example. Service areas must comply with local regulations.

1.8 Layout Constraints

NOTICE

The X-Ray tube Chiller elevation cannot exceed 3 meters (9.84 feet) in height.

NOTICE

Minimum distance between Digital Detector and UPS is 3 m (118 inches) (Fluoro UPS option).

NOTICE

The distance of the Detector chiller cannot exceed 3 m (1 floor) in height below the detector.

2 Room Layout Drawings

WARNING

LOCATION IN TECHNICAL ROOM FOR ELECTRICAL CABINETS IS MANDATORY. THE ELECTRONIC CABINETS (C1, C2, COOLIX 4000 CHILLER, DETECTOR CHILLER AND FLUORO UPS WHEN INSTALLED) INCLUDE FANS THAT ARE CREATING AIR–CIRCULATION OF PULSED–AIR. WHEN THIS PULSED AIR IS IN AN ENVIRONMENT THAT MAY CONTAIN AIRBORNE PATHOGENS LIKE AN EXAM ROOM/CONTROL ROOM, THERE IS A RISK OF TRANSMISSION OF THESE AIRBORNE PATHOGENS FROM PATIENTS TO OTHER PATIENTS OR CLINICAL PERSONNEL (NOSOCOMIAL DISEASES).
TO REDUCE THIS RISK, THE ELECTRONIC CABINETS MUST BE INSTALLED IN A ROOM SEPARATED FROM EXAM ROOM/CONTROL ROOM, I.E., TECHNICAL ROOM.

For exam and control rooms, several configurations are recommended.

NOTE: Motion controls installed in remote location from the table shall be installed at a location where all the positioner axis are visible by the operator.

In case the system has a tilting table, the remote motion controls shall not be installed on the longitudinal axis of the Table (to avoid any operator visual dead angle due to tilted table top hiding the patient).

Refer to Section 2.2 to Section 2.6 to see recommended exam / control rooms layouts.

2.1 Room layout and room min length

Table 4-1: Exam Room dimensions

	Length	Width	Ceiling Height
Recommended:	32 ft 0 in (9.75m)	20 ft 0 in (6.00 m)	10 ft 0 in (3.05 m)
Minimum:	For minimum exam room lengths, see different table configurations in Illustration 4-2 , Illustration 4-3 and Illustration 4-4	14 ft 5 in (4.40 m)	9 ft 0 in (2.74 m)
Note (1): With a 3 monitor frame suspension, take care with the ceiling height not more 3.05 m (10 ft)			

Illustration 4-2: Omega V or Tilt Table (Angio, Cardio, Neuro) with header extender

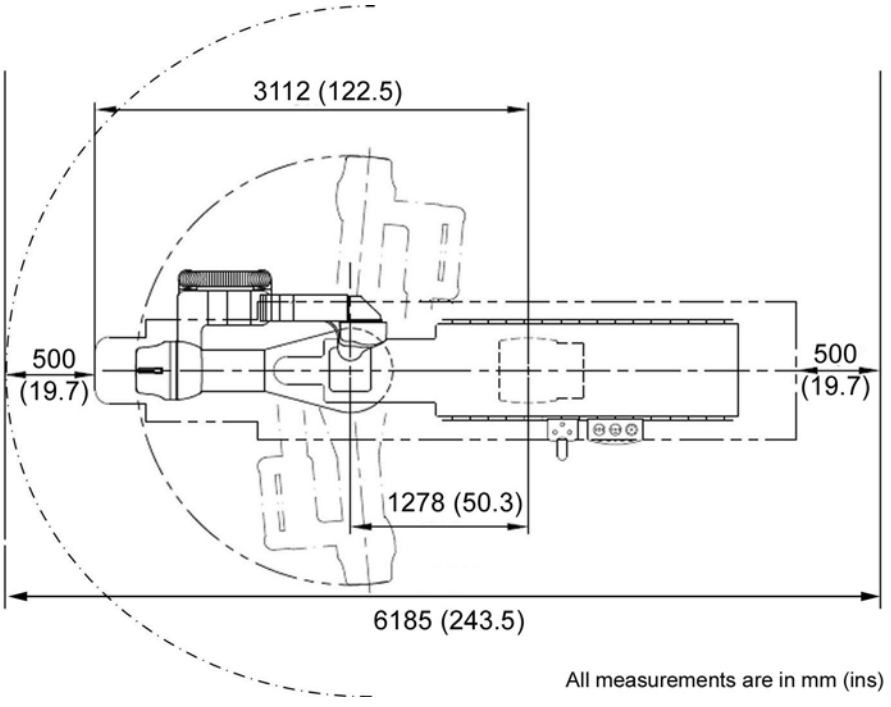

Illustration 4-3: Omega V or Tilt Table (Angio, Cardio, Neuro) without header extender (requirement = 500 mm)

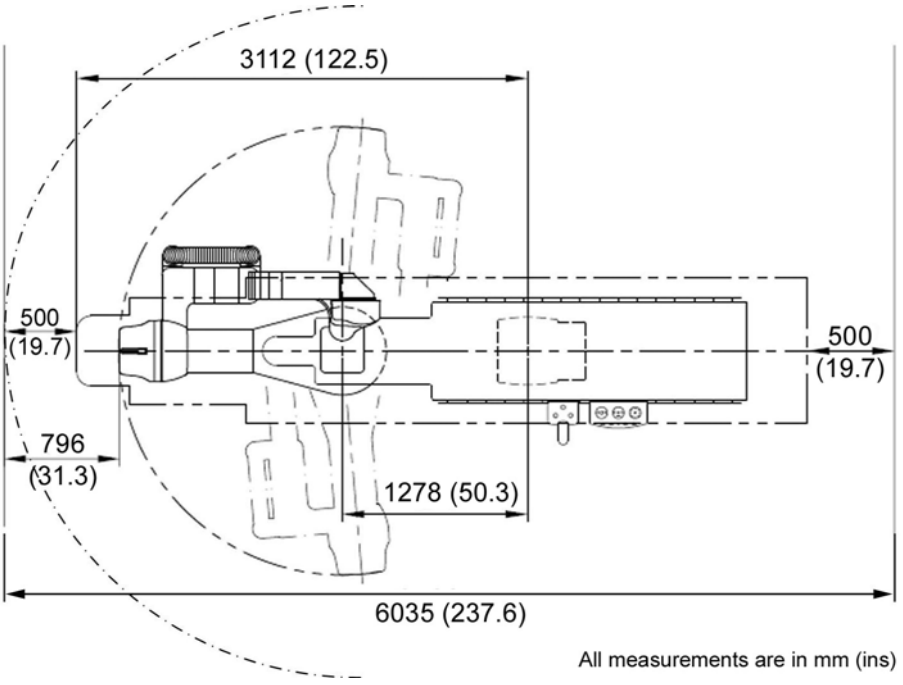

Illustration 4-4: Omega IV or Tilt Table (with or without header extender) in cardio/neuro configuration

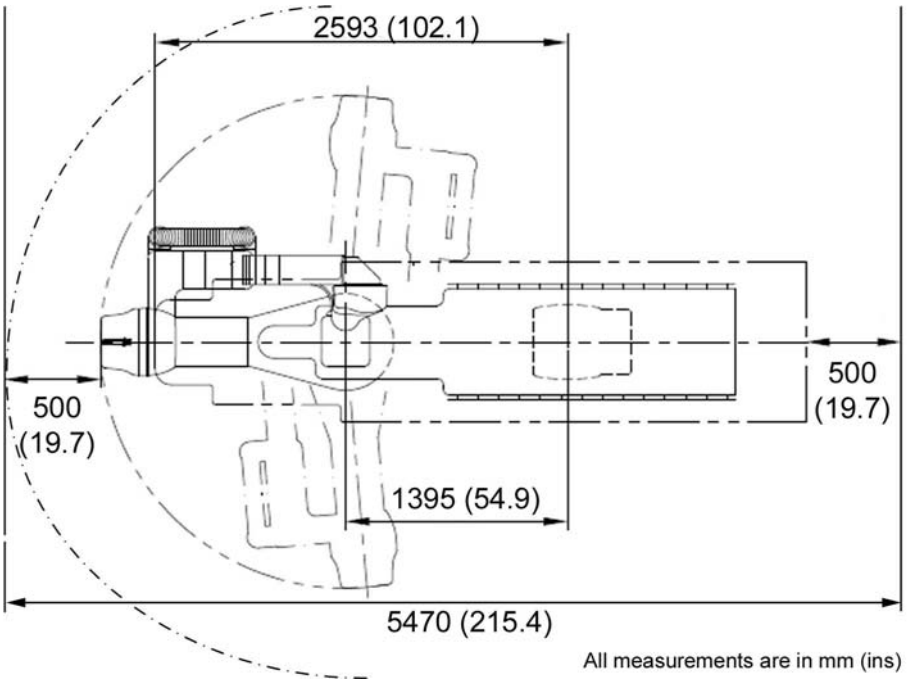

2.2 Room Layout for Innova System (example 1 & 2- Suspension rails parallel to table)

Illustration 4-5: Example 1 - suspension rails adjacent to patient table

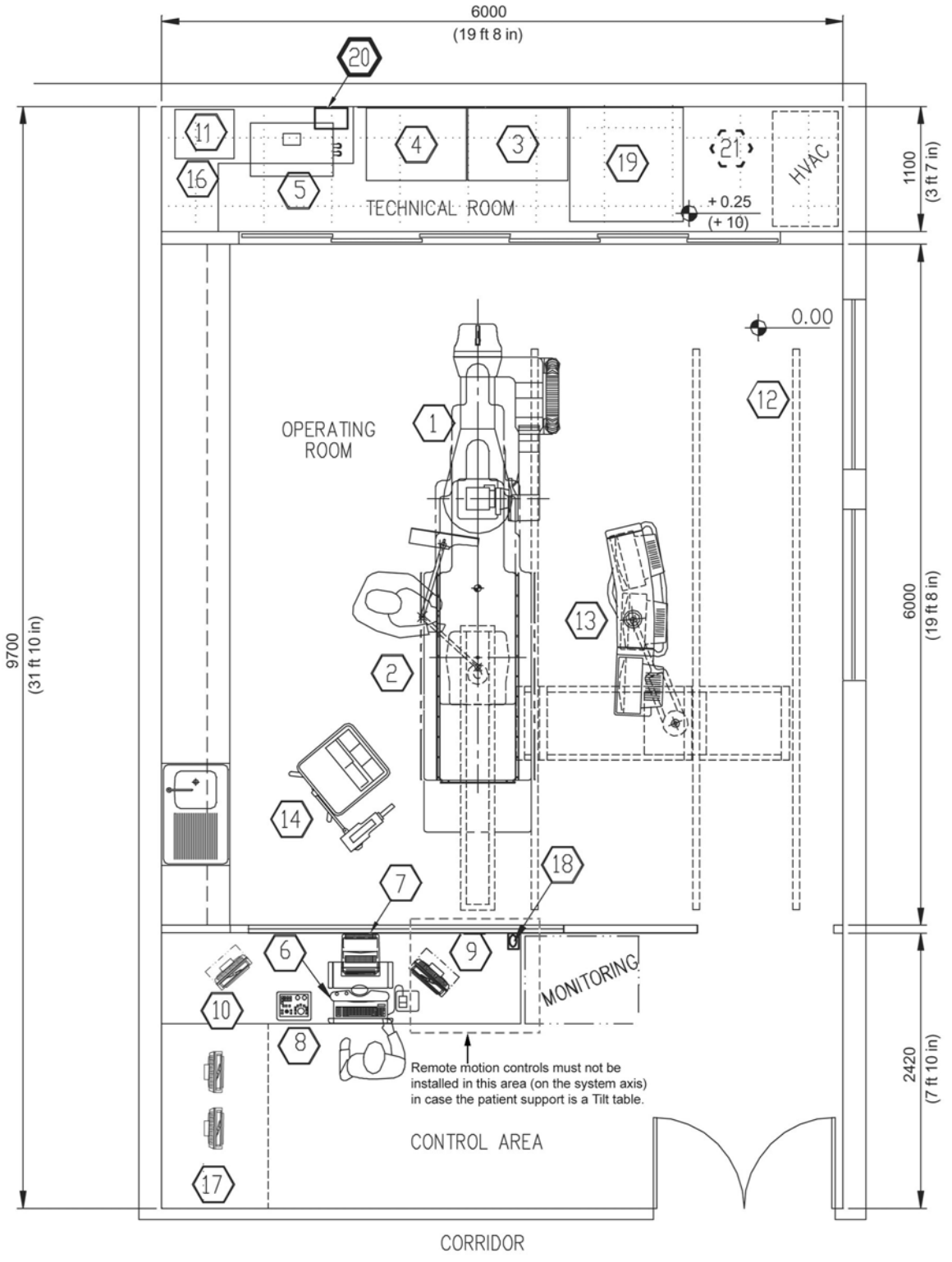

Illustration 4-6: Example 2 - suspension rails either side of patient table

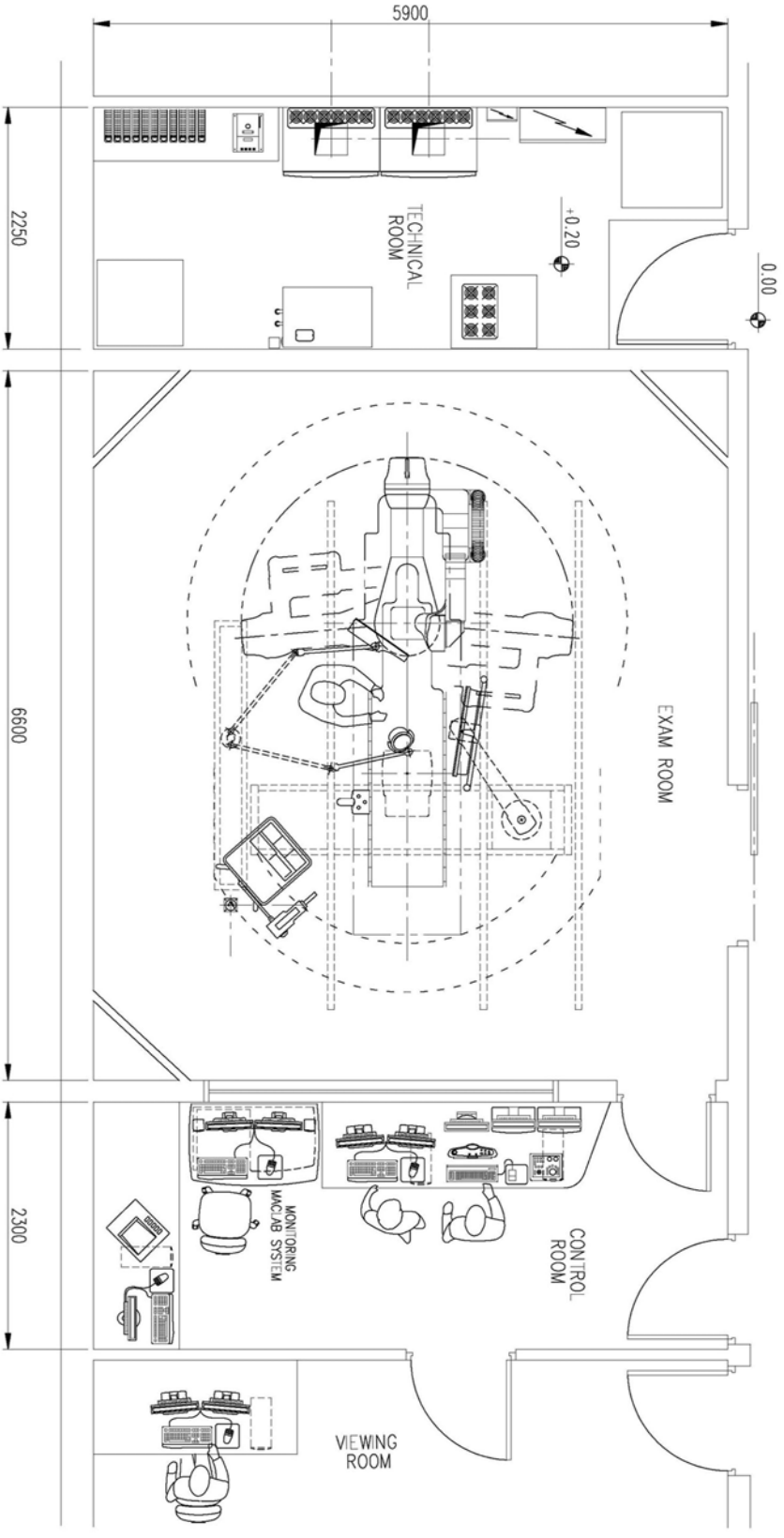

WARNING

LOCATION IN TECHNICAL ROOM FOR ELECTRICAL CABINETS IS MANDATORY. THE ELECTRONIC CABINETS (C1, C2, COOLIX 4000 CHILLER, DETECTOR CHILLER AND FLUORO UPS WHEN INSTALLED) INCLUDE FANS THAT ARE CREATING AIR–CIRCULATION OF PULSED–AIR. WHEN THIS PULSED AIR IS IN AN ENVIRONMENT THAT MAY CONTAIN AIRBORNE PATHOGENS LIKE AN EXAM ROOM/CONTROL ROOM, THERE IS A RISK OF TRANSMISSION OF THESE AIRBORNE PATHOGENS FROM PATIENTS TO OTHER PATIENTS OR CLINICAL PERSONNEL (NOSOCOMIAL DISEASES).
TO REDUCE THIS RISK, THE ELECTRONIC CABINETS MUST BE INSTALLED IN A ROOM SEPARATED FROM EXAM ROOM/CONTROL ROOM, I.E., TECHNICAL ROOM.

Legend of Illustration 4-5

1. Innova LC positioner
2. Patient table
3. C1 Cabinet
4. C2 Cabinet
5. Chiller Coolix 4000 (X–Ray tube housing)
6. VCIM Console and DL keyboard
7. DL Image monitor
8. DL Keypad
9. Flat panel monitor for Live Images
10. Flat Panel monitor for Roadmap Images
11. Chiller Innova Detector
12. XT monitor suspension
13. 21” (53 cm) FFD Monitors put on frame with monitoring screen
14. Injector on Pedestal
15. - NA -
16. Bookcase or bookshelves required for Technical Publications and special parts and tools
17. AW Station and flat panel monitor (x2)
18. Bolus handle (optional)
19. Fluoro UPS (optional)
20. Fluoro UPS I/F box (optional)
21. EMI Filter Enclosure (optional - Only with CE Fluoro UPS)

NOTE: The phone outlet must be located less than 1 meter (3 feet) from the C1 Cabinet (3).

2.3 Room Layout for Innova System (example 3)

Illustration 4-7: Example 3 - suspension perpendicular to patient table

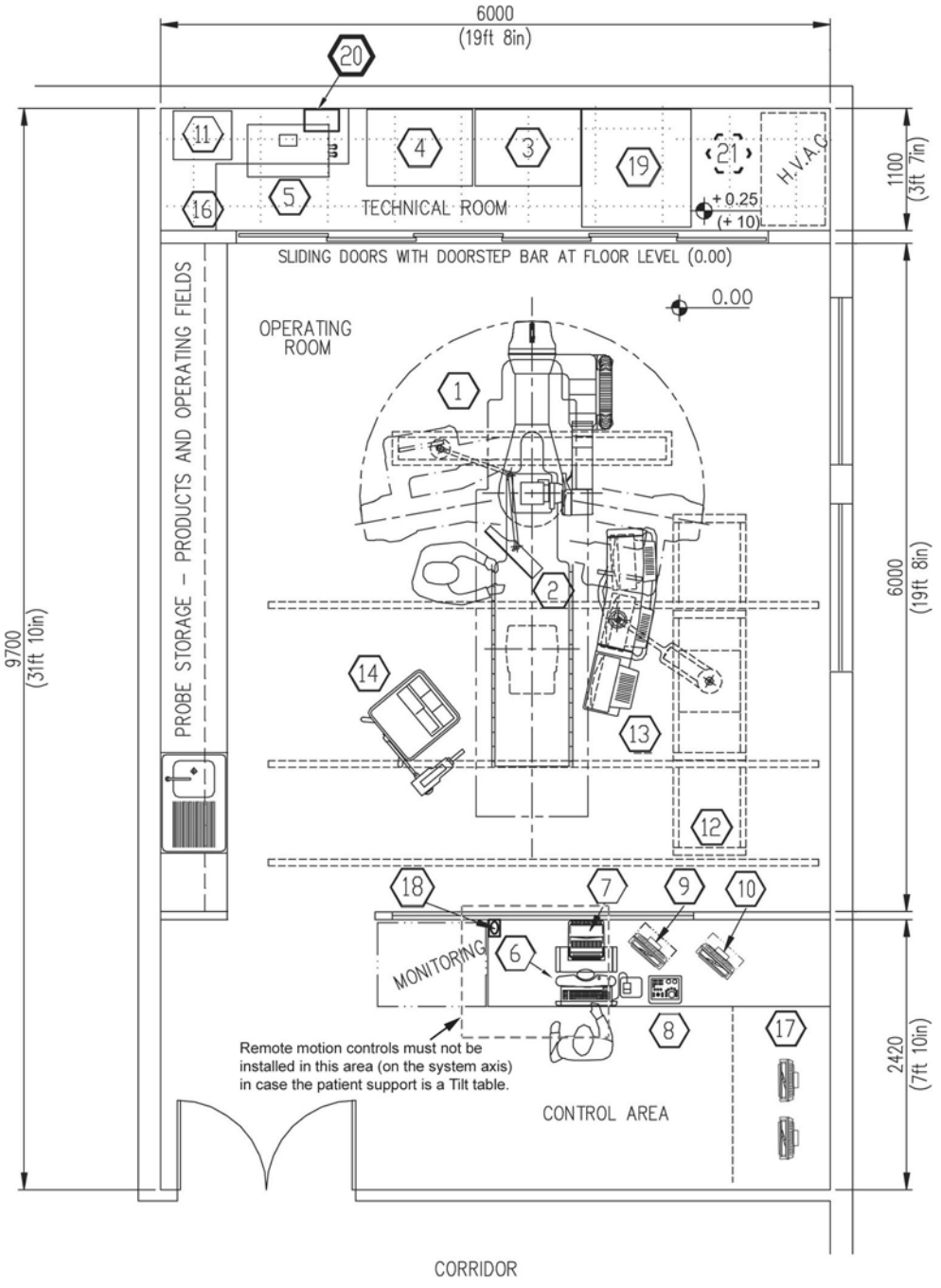

NOTICE

Monitor suspension shown on this illustration is not finalized location yet.

WARNING

LOCATION IN TECHNICAL ROOM FOR ELECTRICAL CABINETS IS MANDATORY. THE ELECTRONIC CABINETS (C1, C2, COOLIX 4000 CHILLER, DETECTOR CHILLER AND FLUORO UPS WHEN INSTALLED) INCLUDE FANS THAT ARE CREATING AIR–CIRCULATION OF PULSED–AIR. WHEN THIS PULSED AIR IS IN AN ENVIRONMENT THAT MAY CONTAIN AIRBORNE PATHOGENS LIKE AN EXAM ROOM/CONTROL ROOM, THERE IS A RISK OF TRANSMISSION OF THESE AIRBORNE PATHOGENS FROM PATIENTS TO OTHER PATIENTS OR CLINICAL PERSONNEL (NOSOCOMIAL DISEASES).
TO REDUCE THIS RISK, THE ELECTRONIC CABINETS MUST BE INSTALLED IN A ROOM SEPARATED FROM EXAM ROOM/CONTROL ROOM, I.E., TECHNICAL ROOM.

Legend of Illustration 4-7

1. Innova LC positioner
2. Patient table
3. C1 Cabinet
4. C2 Cabinet
5. Chiller Coolix 4000 (X–Ray tube housing)
6. VCIM Console and DL keyboard
7. DL Image monitor
8. DL Keypad
9. Flat panel monitor for Live Images
10. Flat Panel monitor for Roadmap Images
11. Chiller Innova Detector
12. XT monitor suspension
13. 21” (53 cm) FFD Monitors put on frame with monitoring screen
14. Injector on Pedestal
15. - NA -
16. Bookcase or bookshelves required for Technical Publications and special parts and tools
17. AW Station and flat panel monitor (x2)
18. Bolus handle (optional)
19. Fluoro UPS (optional)
20. Fluoro UPS I/F box (optional)
21. EMI Filter Enclosure (optional - Only with CE Fluoro UPS)

NOTE: The phone outlet must be located less than 1 meter (3 feet) from the C1 Cabinet (3).

2.4 Room Layout for Innova System (example 4)

Illustration 4-8: Example 4 - suspension perpendicular to patient table

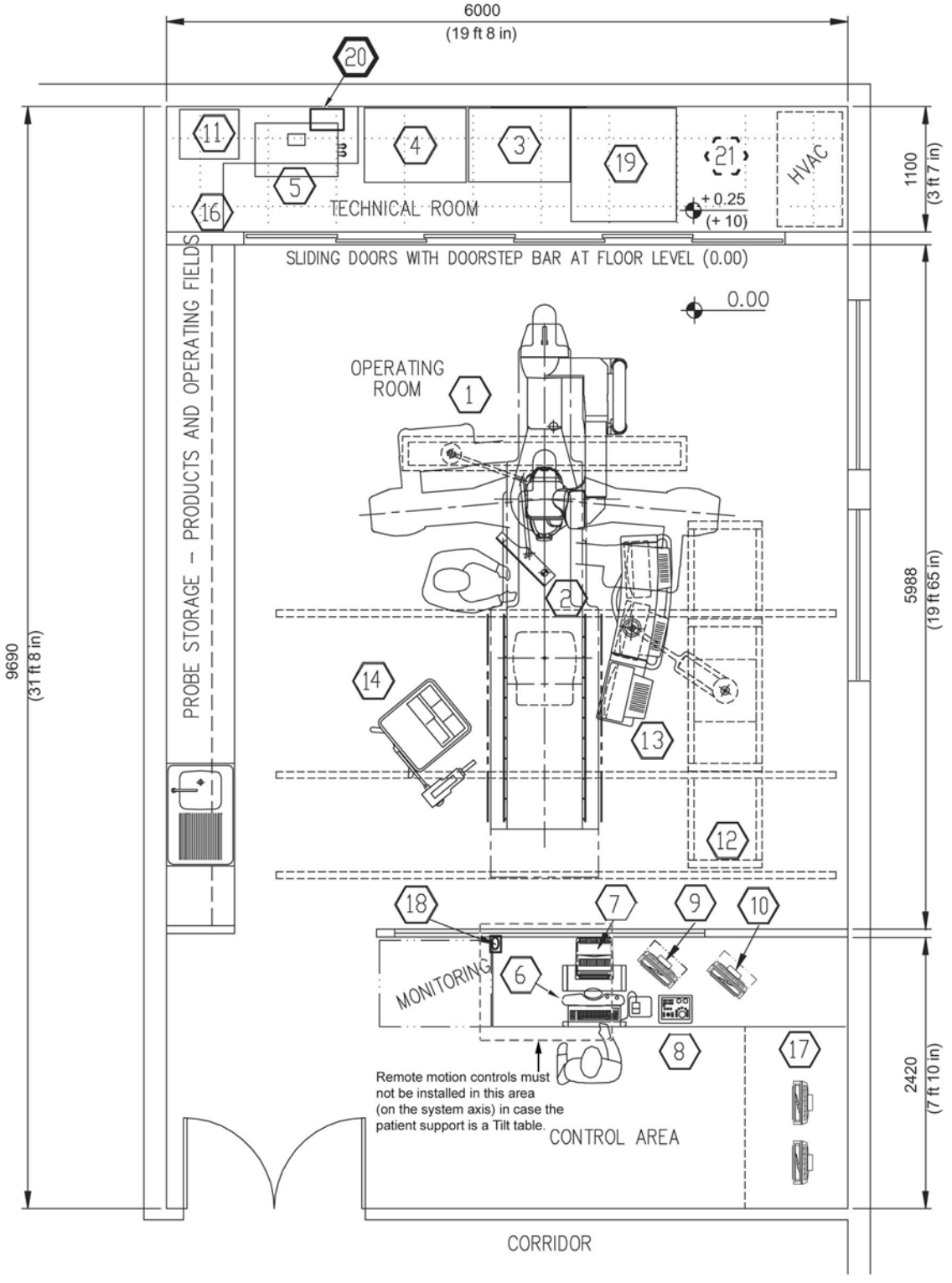

WARNING

LOCATION IN TECHNICAL ROOM FOR ELECTRICAL CABINETS IS MANDATORY. THE ELECTRONIC CABINETS (C1, C2, COOLIX 4000 CHILLER, DETECTOR CHILLER AND FLUORO UPS WHEN INSTALLED) INCLUDE FANS THAT ARE CREATING AIR–CIRCULATION OF PULSED–AIR. WHEN THIS PULSED AIR IS IN AN ENVIRONMENT THAT MAY CONTAIN AIRBORNE PATHOGENS LIKE AN EXAM ROOM/CONTROL ROOM, THERE IS A RISK OF TRANSMISSION OF THESE AIRBORNE PATHOGENS FROM PATIENTS TO OTHER PATIENTS OR CLINICAL PERSONNEL (NOSOCOMIAL DISEASES).
TO REDUCE THIS RISK, THE ELECTRONIC CABINETS MUST BE INSTALLED IN A ROOM SEPARATED FROM EXAM ROOM/CONTROL ROOM, I.E., TECHNICAL ROOM.

Legend of Illustration 4-8

1. Innova LC positioner
2. Patient table
3. C1 Cabinet
4. C2 Cabinet
5. Chiller Coolix 4000 (X–Ray tube housing)
6. VCIM Console and DL keyboard
7. DL Image monitor
8. DL Keypad
9. Flat panel monitor for Live Images
10. Flat Panel monitor for Roadmap Images
11. Chiller Innova Detector
12. XT monitor suspension
13. 21” (53 cm) FFD Monitors put on frame with monitoring screen
14. Injector on Pedestal
15. - NA -
16. Bookcase or bookshelves required for Technical Publications and special parts and tools
17. AW Station and flat panel monitor (x2)
18. Bolus handle (optional)
19. Fluoro UPS (optional)
20. Fluoro UPS I/F box (optional)
21. EMI Filter Enclosure (optional - Only with CE Fluoro UPS)

NOTE: The phone outlet must be located less than 1 meter (3 feet) from the C1 Cabinet (3).

2.5 Room Lighting for Innova System

Illustration 4-9: Room Lighting for Innova System

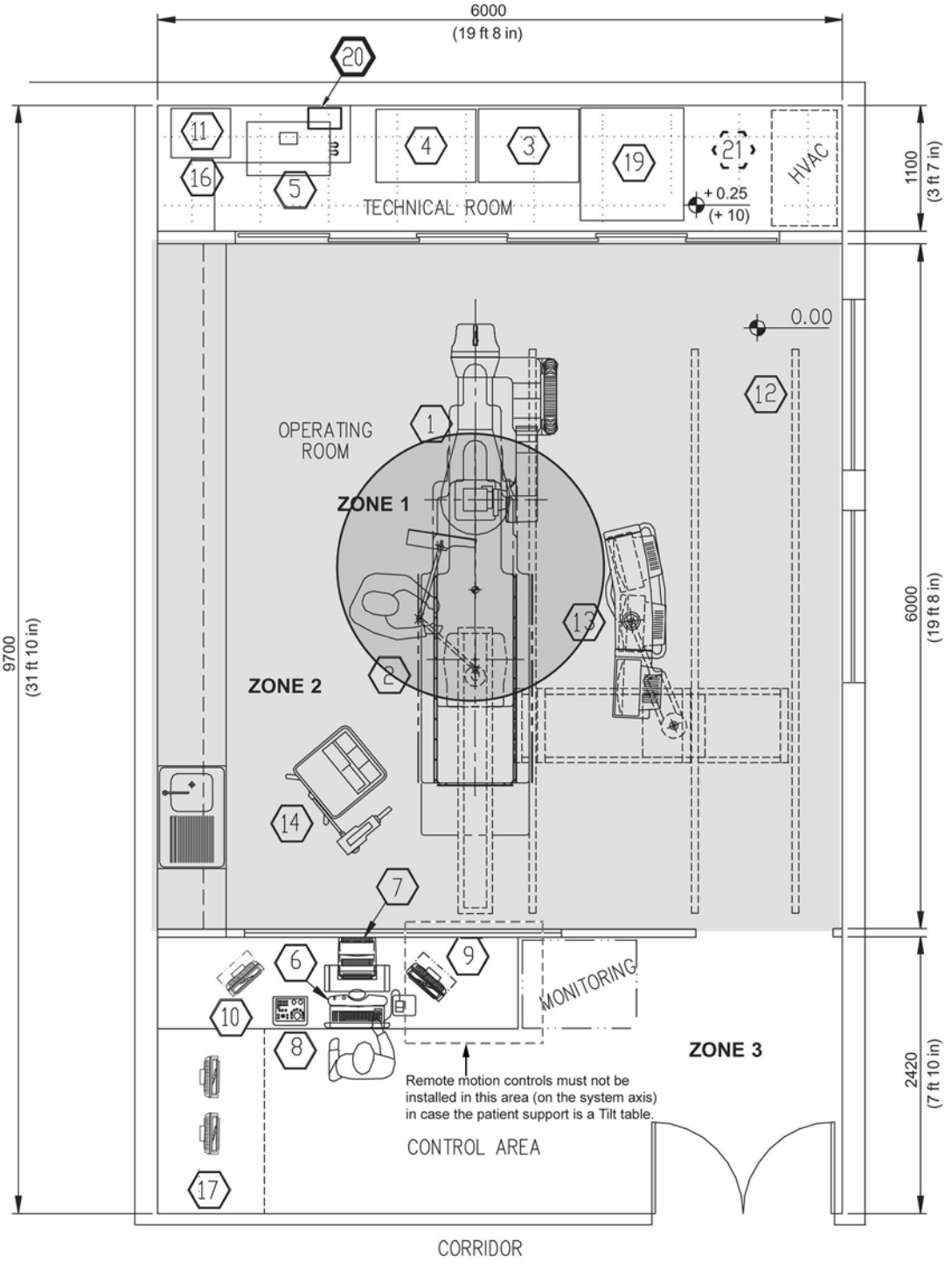

WARNING

LOCATION IN TECHNICAL ROOM FOR ELECTRICAL CABINETS IS MANDATORY. THE ELECTRONIC CABINETS (C1, C2, COOLIX 4000 CHILLER, DETECTOR CHILLER AND FLUORO UPS WHEN INSTALLED) INCLUDE FANS THAT ARE CREATING AIR–CIRCULATION OF PULSED–AIR. WHEN THIS PULSED AIR IS IN AN ENVIRONMENT THAT MAY CONTAIN AIRBORNE PATHOGENS LIKE AN EXAM ROOM/CONTROL ROOM, THERE IS A RISK OF TRANSMISSION OF THESE AIRBORNE PATHOGENS FROM PATIENTS TO OTHER PATIENTS OR CLINICAL PERSONNEL (NOSOCOMIAL DISEASES).
TO REDUCE THIS RISK, THE ELECTRONIC CABINETS MUST BE INSTALLED IN A ROOM SEPARATED FROM EXAM ROOM/CONTROL ROOM, I.E., TECHNICAL ROOM.

Legend of Illustration 4-9

1. Innova LC positioner
2. Patient table
3. C1 Cabinet
4. C2 Cabinet
5. Chiller Coolix 4000 (X–Ray tube housing)
6. VCIM Console and DL keyboard
7. DL Image monitor
8. DL Keypad
9. Flat panel monitor for Live Images
10. Flat Panel monitor for Roadmap Images
11. Chiller Innova Detector
12. XT monitor suspension
13. 21” (53 cm) FFD Monitors put on frame with monitoring screen
14. Injector on Pedestal
15. - NA -
16. Bookcase or bookshelves required for Technical Publications and special parts and tools
17. AW Station and flat panel monitor (x2)
18. Bolus handle (optional)
19. Fluoro UPS (optional)
20. Fluoro UPS I/F box (optional)
21. EMI Filter Enclosure (optional - Only with CE Fluoro UPS)

NOTE: The phone outlet must be located less than 1 meter (3 feet) from the C1 Cabinet (3).

2.6 Room Layout for Innova System (example with Mobile system 9800)

Illustration 4-10: Room Layout for Innova System

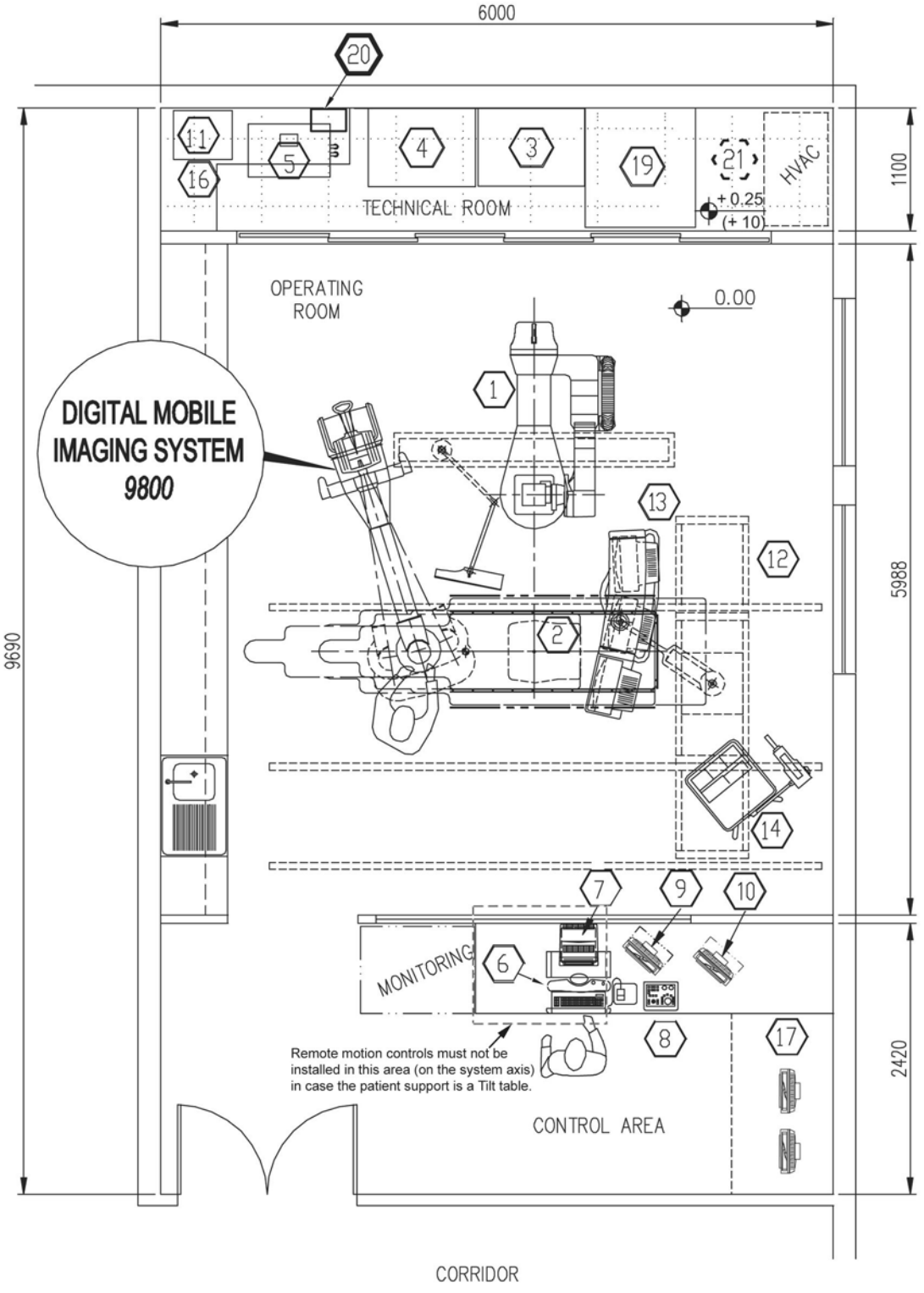

WARNING

LOCATION IN TECHNICAL ROOM FOR ELECTRICAL CABINETS IS MANDATORY. THE ELECTRONIC CABINETS (C1, C2, COOLIX 4000 CHILLER, DETECTOR CHILLER AND FLUORO UPS WHEN INSTALLED) INCLUDE FANS THAT ARE CREATING AIR–CIRCULATION OF PULSED–AIR. WHEN THIS PULSED AIR IS IN AN ENVIRONMENT THAT MAY CONTAIN AIRBORNE PATHOGENS LIKE AN EXAM ROOM/CONTROL ROOM, THERE IS A RISK OF TRANSMISSION OF THESE AIRBORNE PATHOGENS FROM PATIENTS TO OTHER PATIENTS OR CLINICAL PERSONNEL (NOSOCOMIAL DISEASES).
TO REDUCE THIS RISK, THE ELECTRONIC CABINETS MUST BE INSTALLED IN A ROOM SEPARATED FROM EXAM ROOM/CONTROL ROOM, I.E., TECHNICAL ROOM.

Legend of Illustration 4-10

1. Innova LC positioner
2. Patient table
3. C1 Cabinet
4. C2 Cabinet
5. Chiller Coolix 4000 (X–Ray tube housing)
6. VCIM Console and DL keyboard
7. DL Image monitor
8. DL Keypad
9. Flat panel monitor for Live Images
10. Flat Panel monitor for Roadmap Images
11. Chiller Innova Detector
12. XT monitor suspension
13. 21” (53 cm) FFD Monitors put on frame with monitoring screen
14. Injector on Pedestal
15. - NA -
16. Bookcase or bookshelves required for Technical Publications and special parts and tools
17. AW Station and flat panel monitor (x2)
18. Bolus handle (optional)
19. Fluoro UPS (optional)
20. Fluoro UPS I/F box (optional)
21. EMI Filter Enclosure (optional - Only with CE Fluoro UPS)

NOTE: The phone outlet must be located less than 1 meter (3 feet) from the C1 Cabinet (3).

3 IVUS Option

3.1 Functional Diagram

Illustration 4-11:

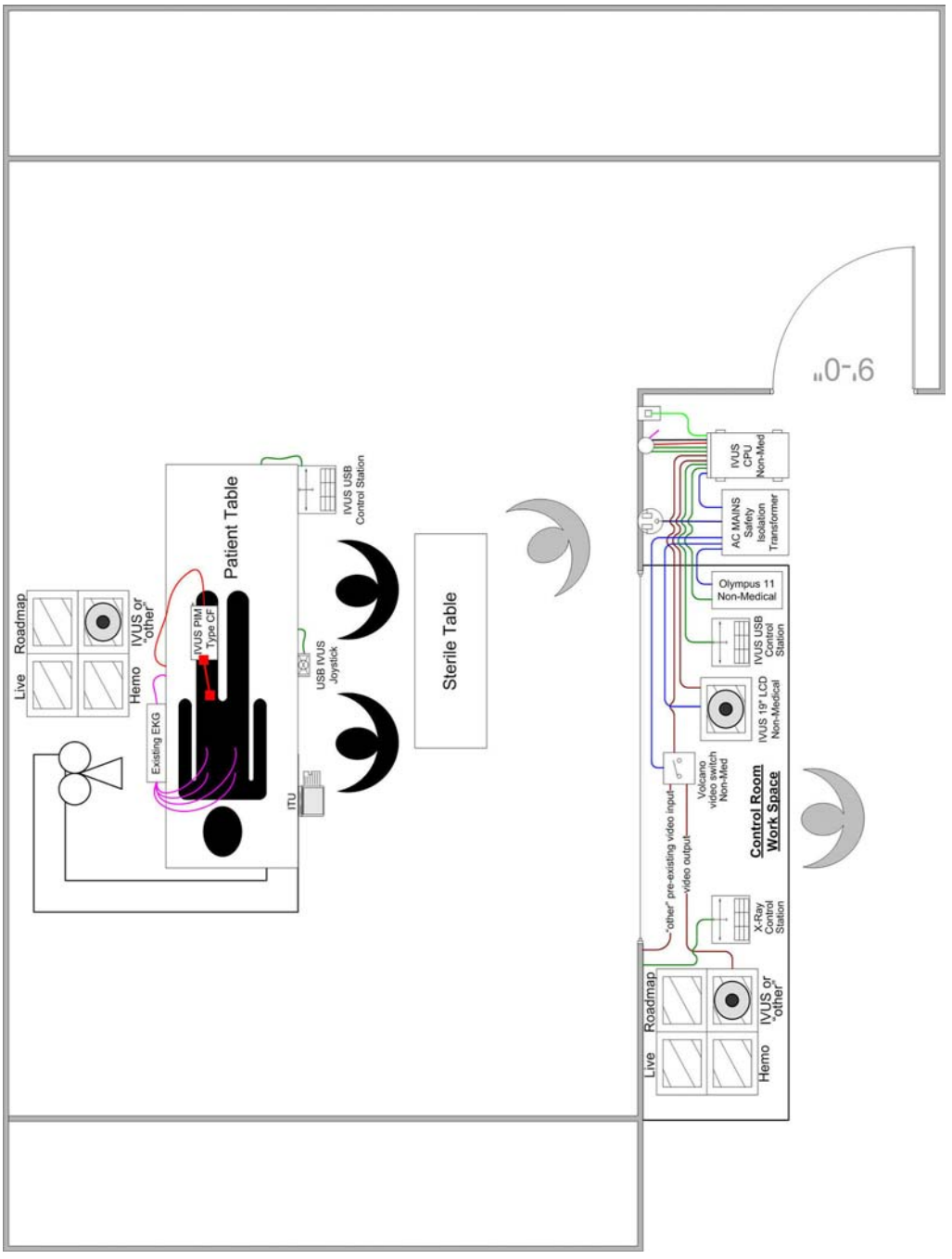

This page left intentionally blank.

Chapter 5 Physical Characteristics

1 Dimension Drawings

Refer to this section for the dimensional drawings of the components of the Innova LC Positioner and Omega Tables sub-systems. These components include:

Innova LC Positioner, Omega Patient Tables, Tilt Patient Table, C2 Cabinet, C1 Cabinet, and Chillers.

In addition, refer to this section for Positioner/table relative position drawings.

Table 5-1:

TITLE	ILLUSTRATION
Innova LC Positioner Dimensions:	
- Side View	Illustration 5-1
- Top View	Illustration 5-2
- Front View	Illustration 5-3
Omega IV Compact Patient Table Dimensions	Illustration 5-4
Omega V Long Patient Table Dimensions	Illustration 5-5
Tilt Patient Table Dimensions	Illustration 5-6
Omega IV Table Interference Regions (Innova 2100-IQ)	Illustration 5-7
Omega V Long Patient Table Interference Regions	Illustration 5-8
Tilt Patient Table Interference Regions	Illustration 5-9
Omega Table side clearence (CPR access)	Illustration 5-10
Innova LC Positioner and Omega IV Compact Patient Table Relative Positions (Innova 2100-IQ)	Illustration 5-11
Innova LC Positioner and Omega V Long Patient Relative Positions	Illustration 5-12
C2 Cabinet Dimensions	Illustration 5-13
C1 Cabinet Dimensions	Illustration 5-14
Floor Space Diagram for Lytron Chiller	Illustration 5-15
Detector Chiller Thermo-Tek Dimensions	Illustration 5-16
Detector Chiller Thermo-Con Dimensions	Illustration 5-17
Detector Chiller Thermo-Tek - Configuration & Orientation	Illustration 5-18
Detector Chiller Thermo-Con - Orientation	Illustration 5-19
Fluoro UPS UL Layout (Optional)	Illustration 5-20
Fluoro UPS CE Layout (Optional)	Illustration 5-21
UPS IF Box (Optional)	Illustration 5-22
Gas box outlets Omega IV	Illustration 5-23
Gas box outlets Omega V	Illustration 5-24
DL Keypad Dimensions	Illustration 5-25
DL Image Monitor Dimensions	Illustration 5-26
VCR Mounting Holes Location	Illustration 5-27

Illustration 5-1: Innova LC Positioner Dimensions: - Side View

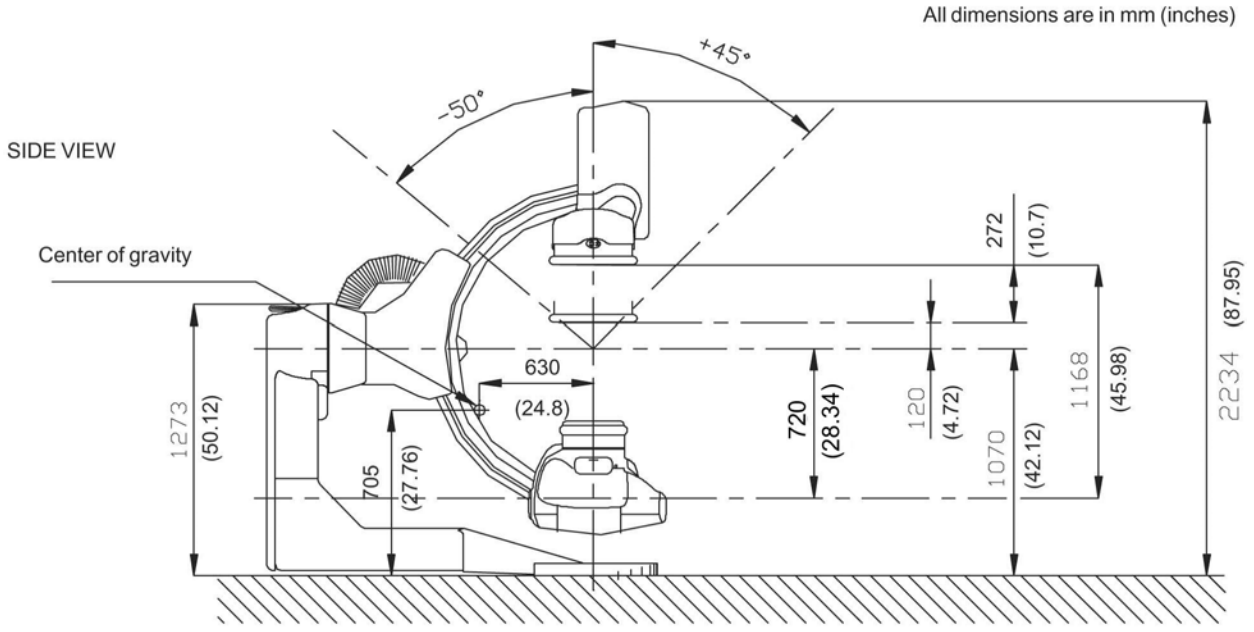

Illustration 5-2: Innova LC Positioner Dimensions: - Top view

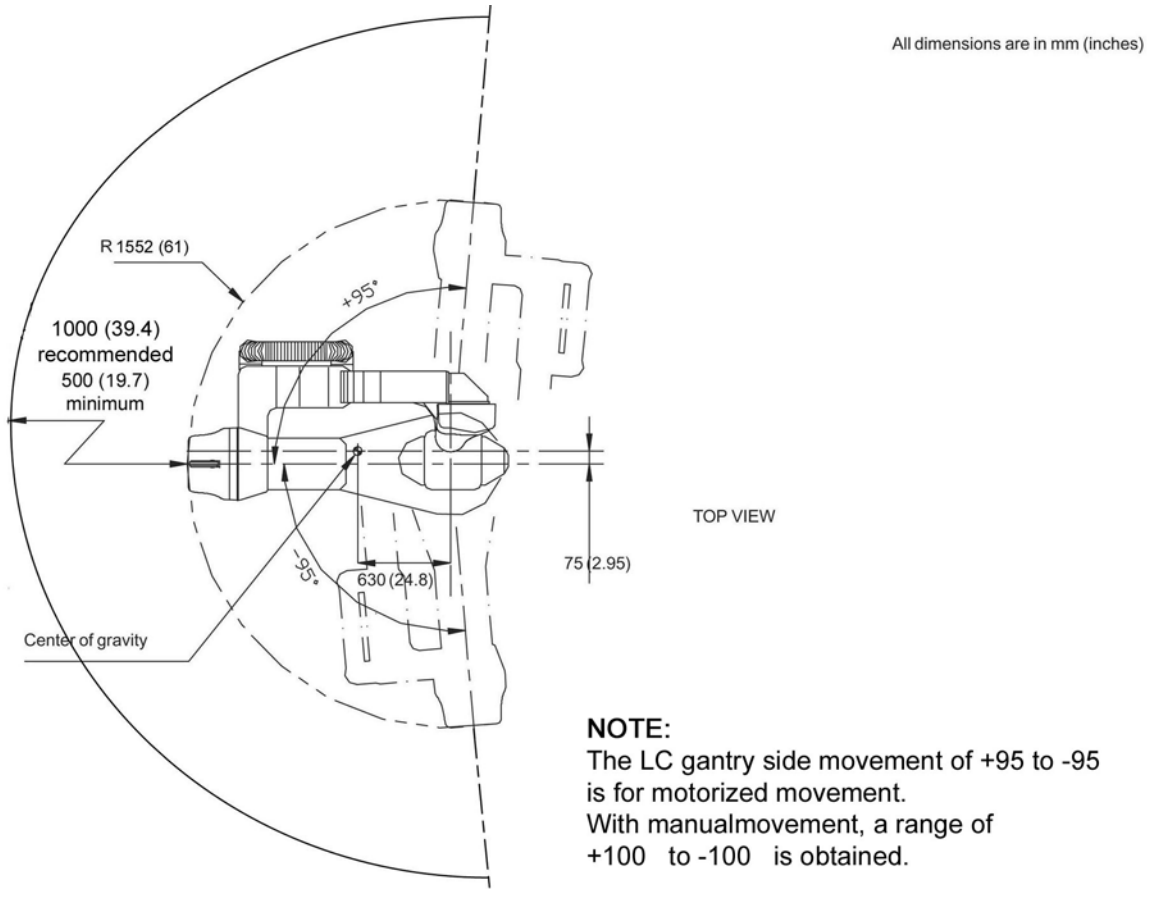

Illustration 5-3: Innova LC Positioner Dimensions: - Top view

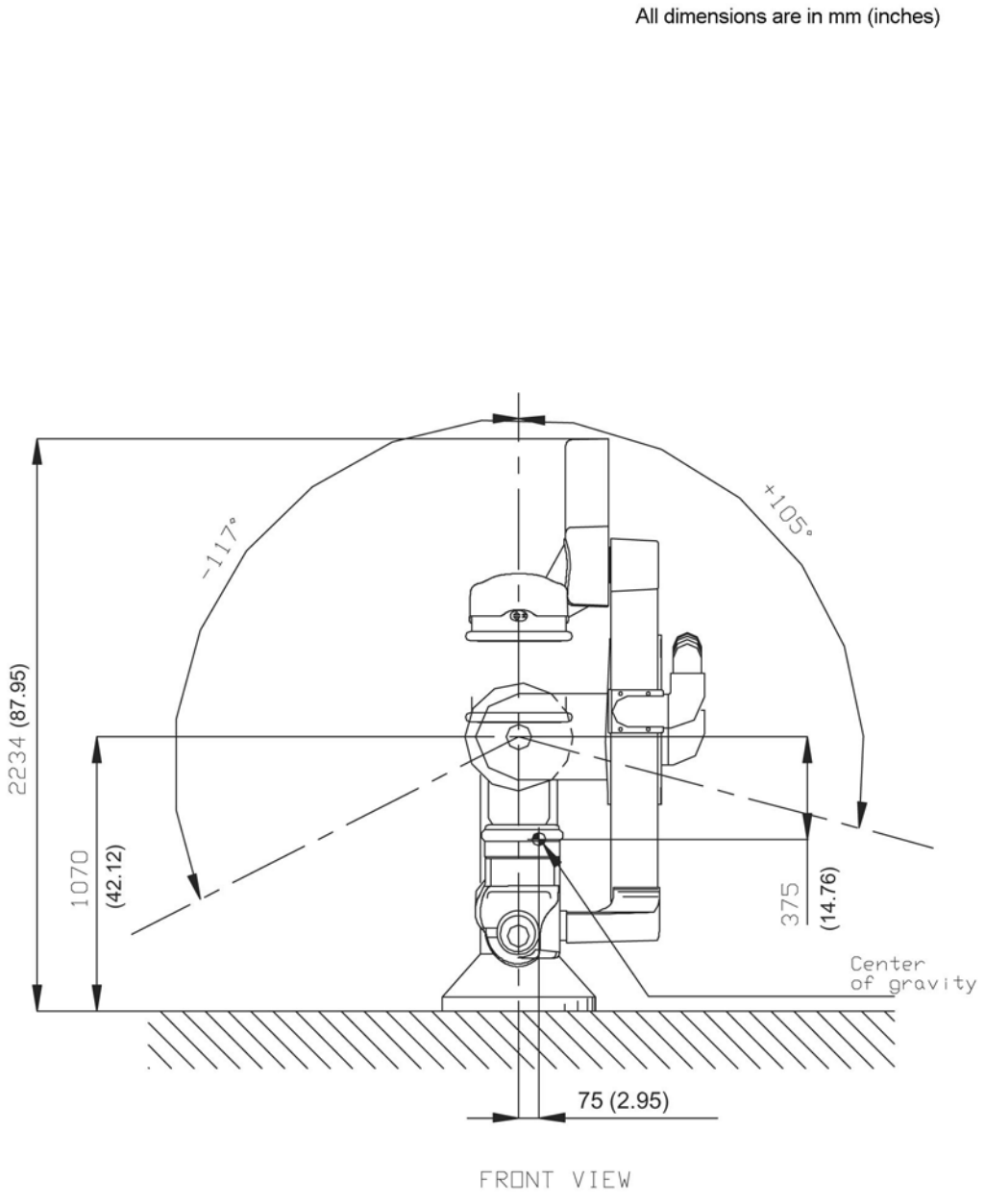

Illustration 5-4: Omega IV Compact Patient Table Dimensions

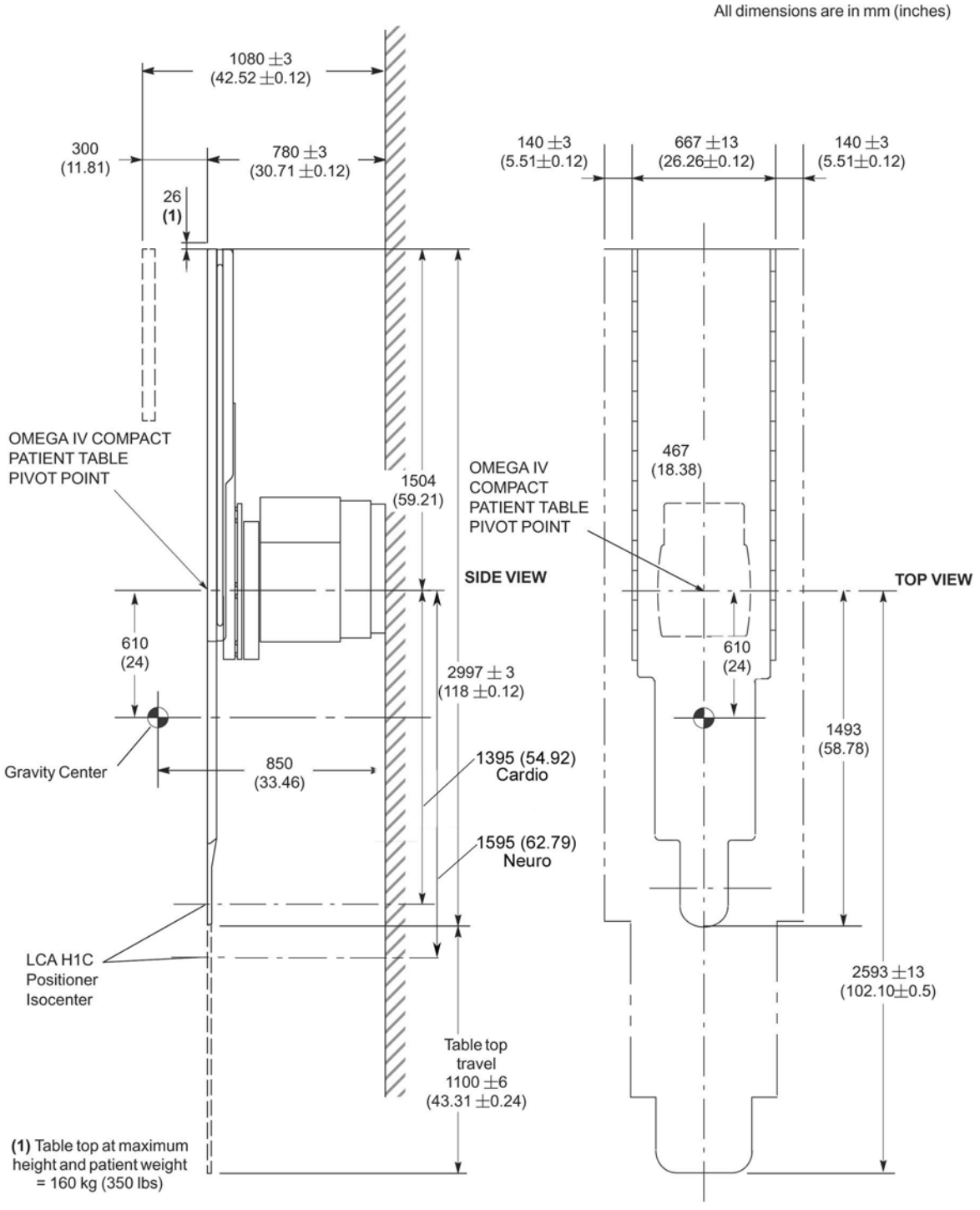

Illustration 5-5: Omega V Long Patient Table Dimensions

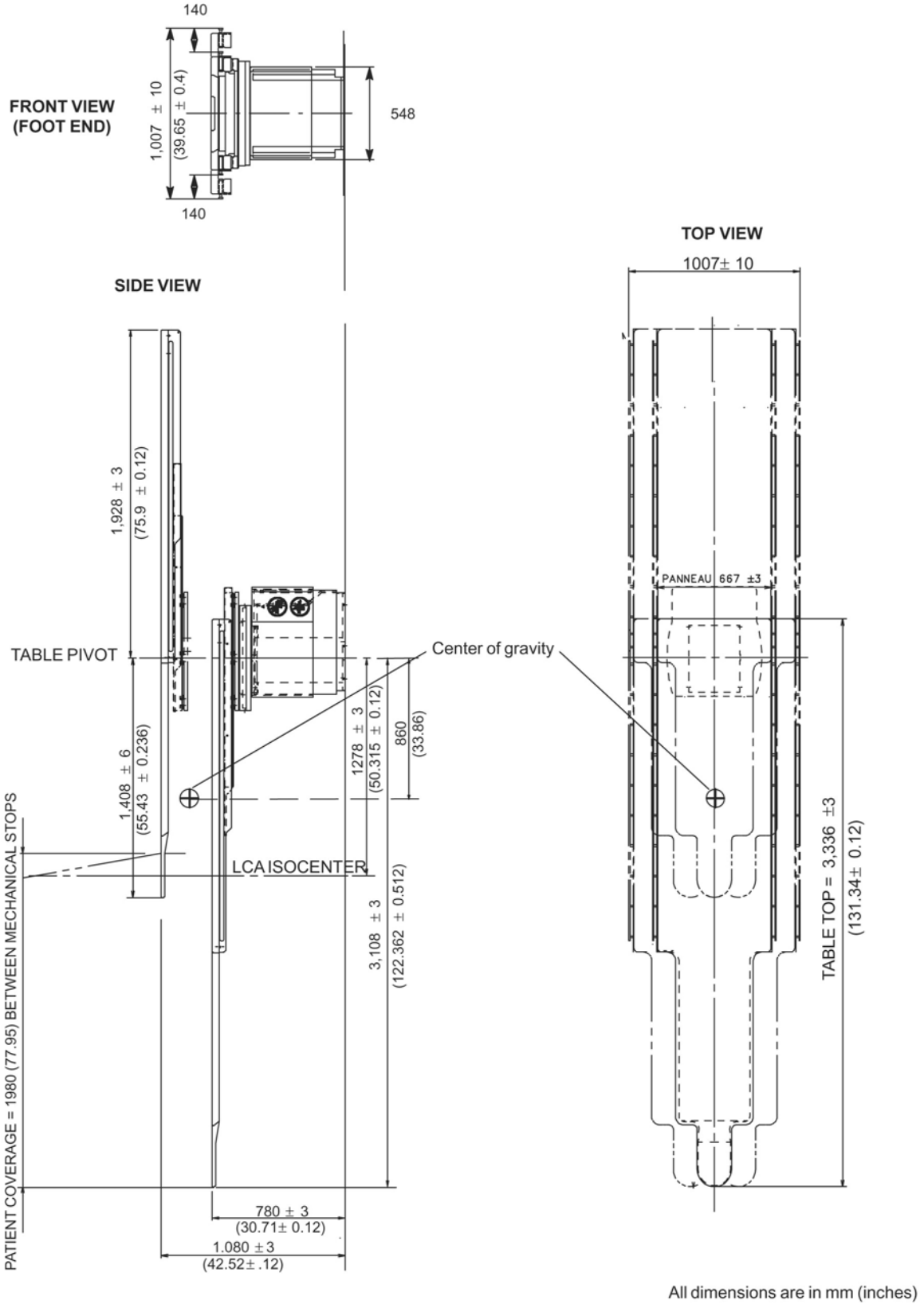

Illustration 5-6: Tilt Patient Table Dimensions

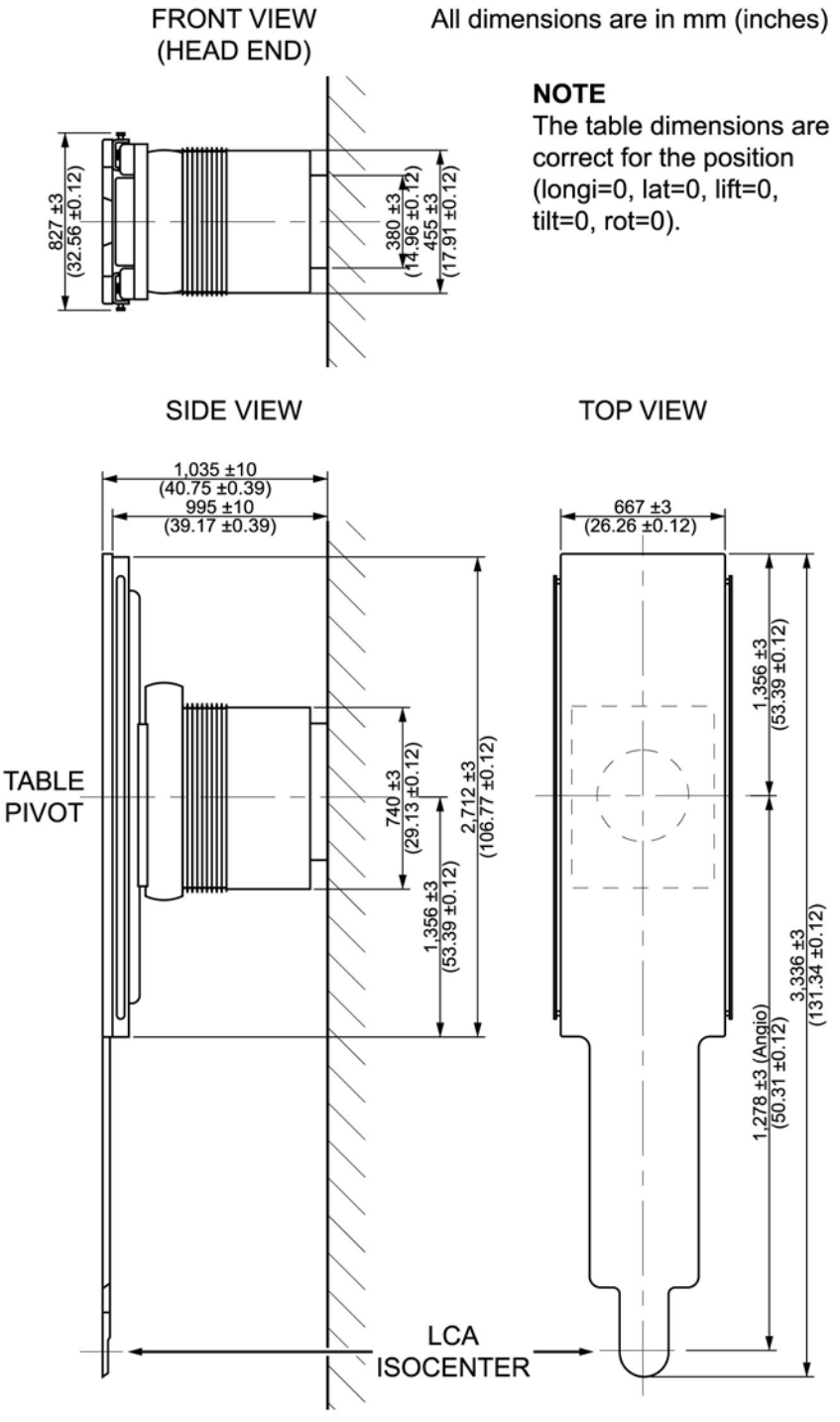

NOTE: With a Tilt Table, the minimum distance from table pivot to the medical Gas Box is 600 mm and the maximum dimensions of the medical Gas Box are :

- height = 305 mm
- width = 250 mm
- length = 500 mm

Illustration 5-7: Omega IV Compact Patient Table Interference Regions (Innova 2100-IQ)

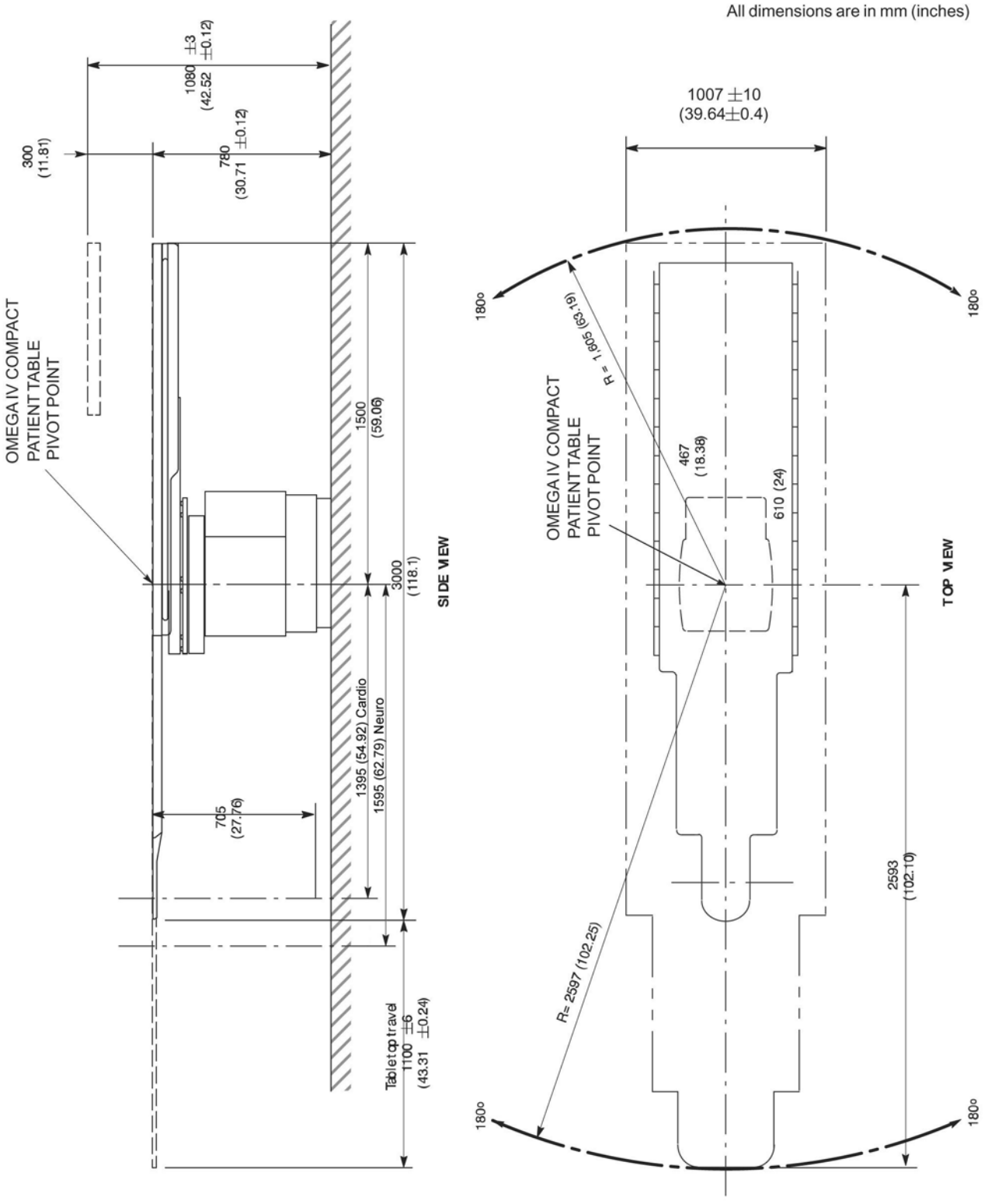

Illustration 5-8: Omega V Long Patient Table Interference Regions

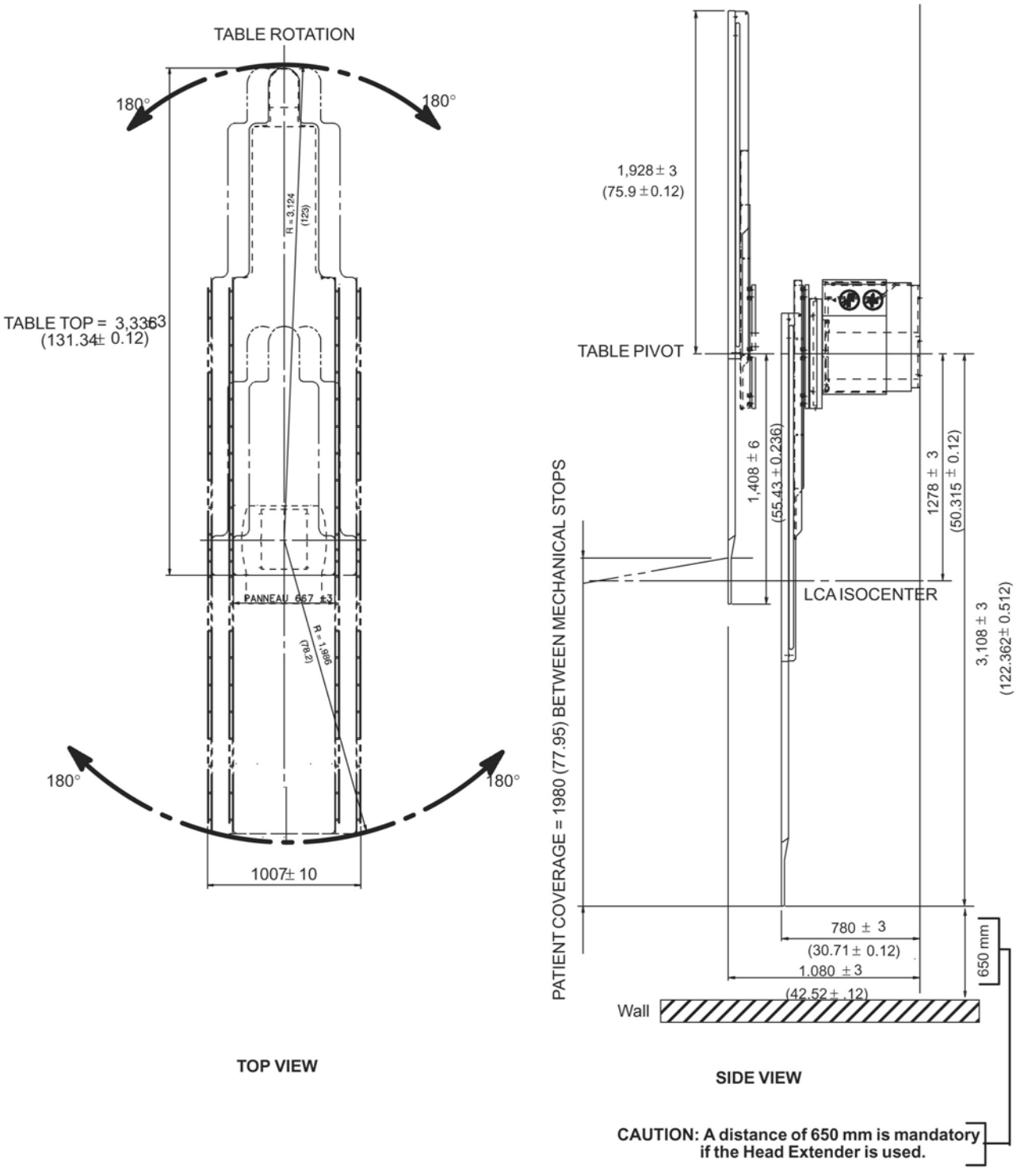

All dimensions are in mm (inches)

Illustration 5-9: Tilt Patient Table Interference Regions

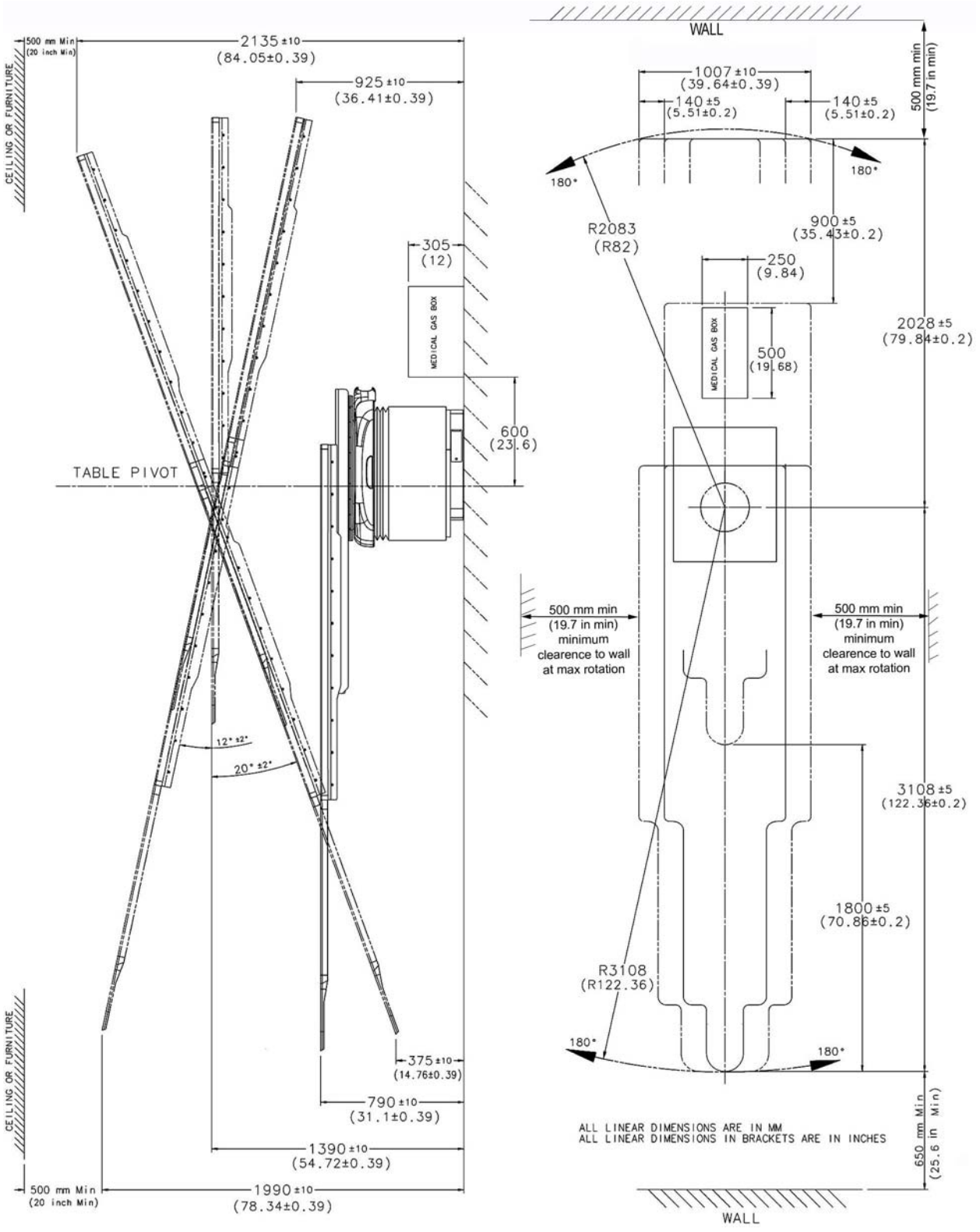

Illustration 5-10: Omega Table side clearence (CPR access)

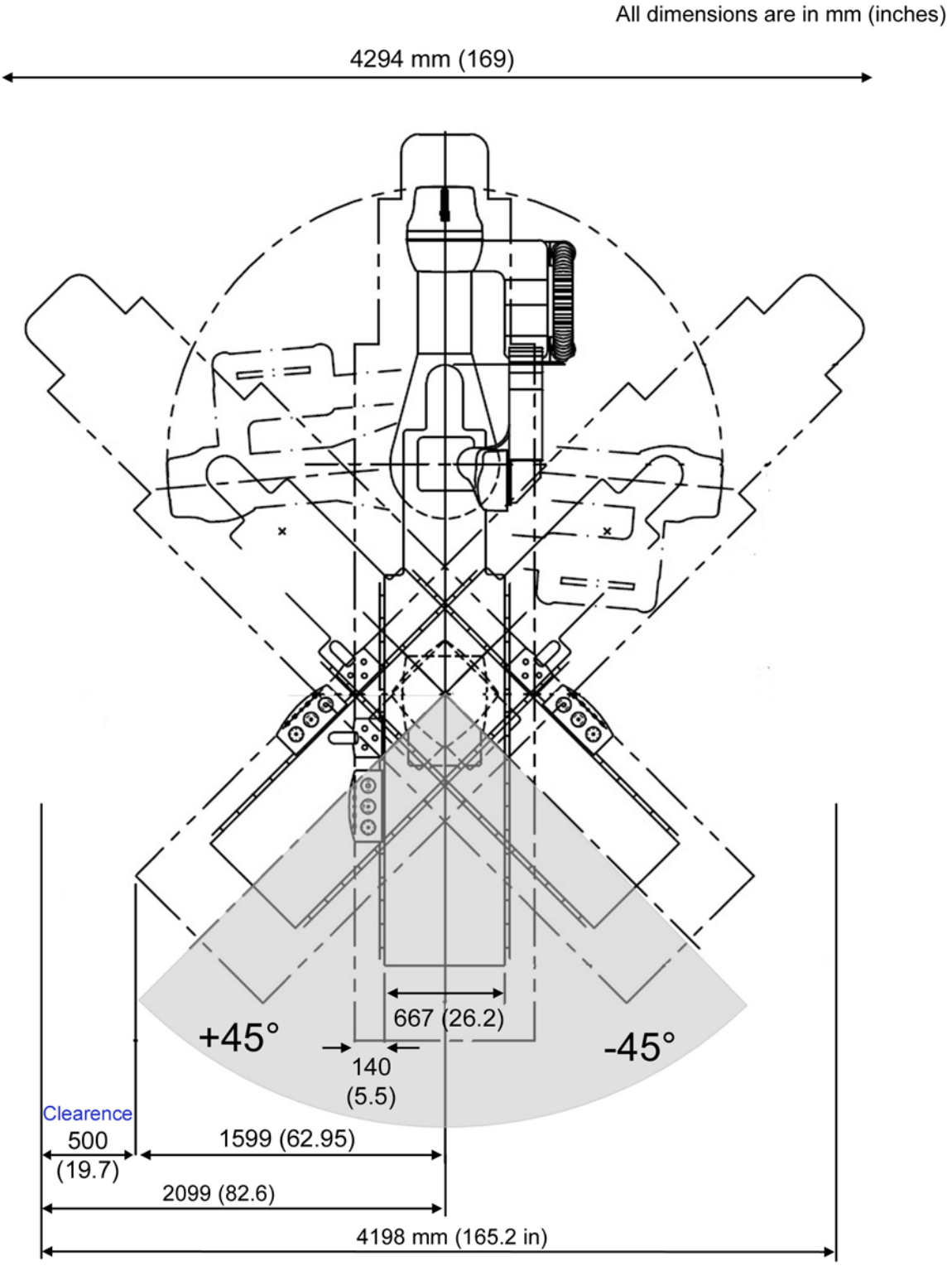

Illustration 5-11: Innova LC Positioner and Omega IV Compact Patient Table Relative Positions (Innova 2100-IQ) - side view

All dimensions are in mm (inches)

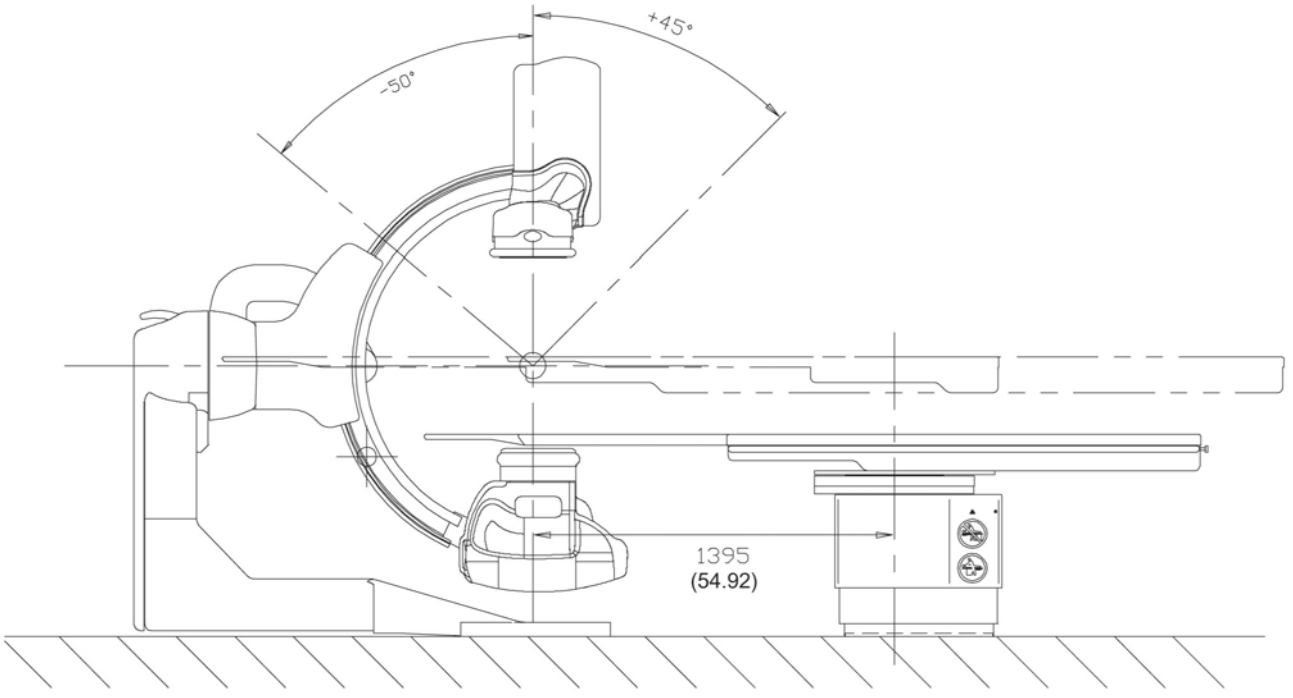

SIDE VIEW

Illustration 5-12: Innova LC Positioner and Omega V Long Patient Table Relative Positions - side view

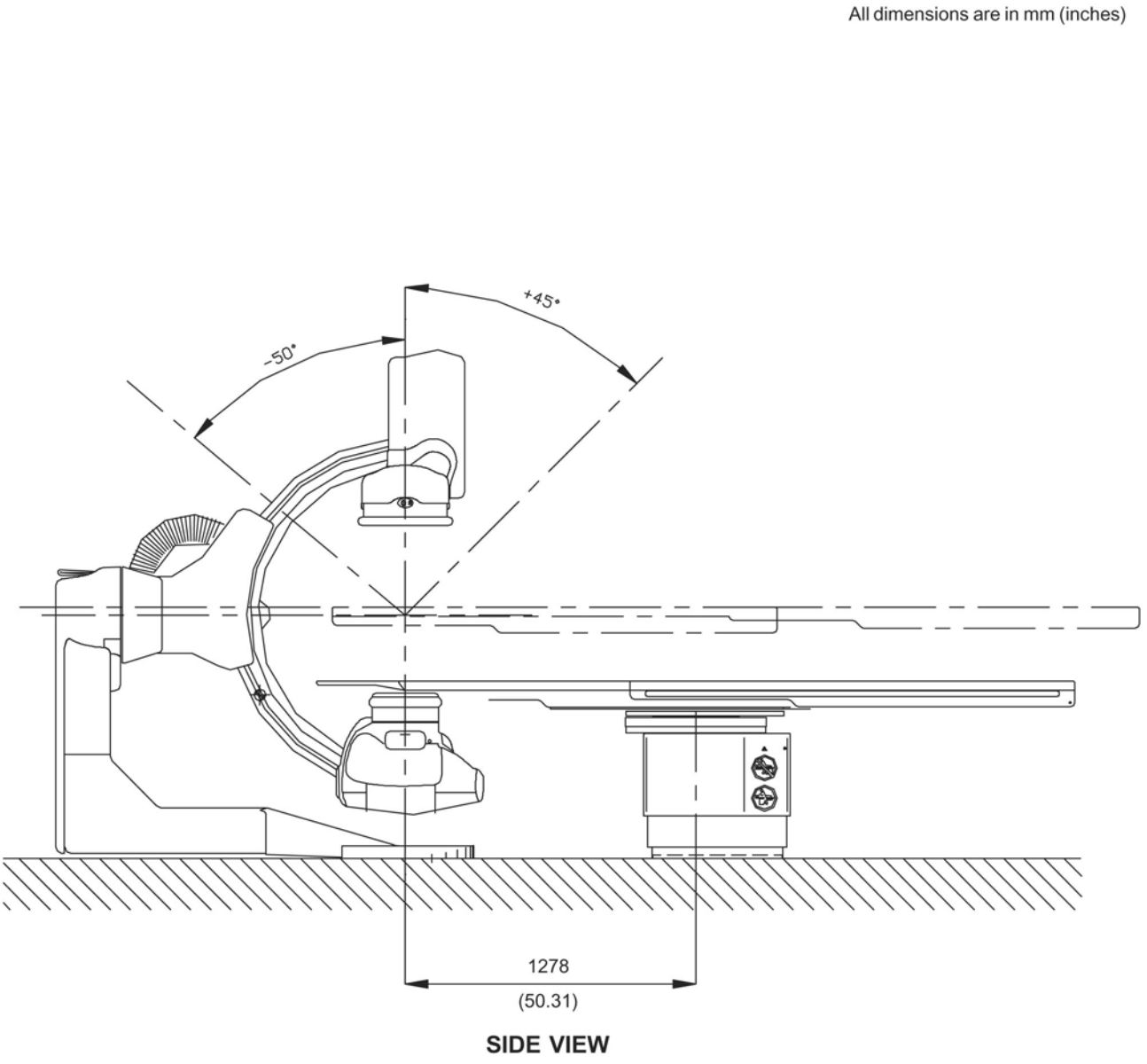

Illustration 5-13: C2 Cabinet Dimensions

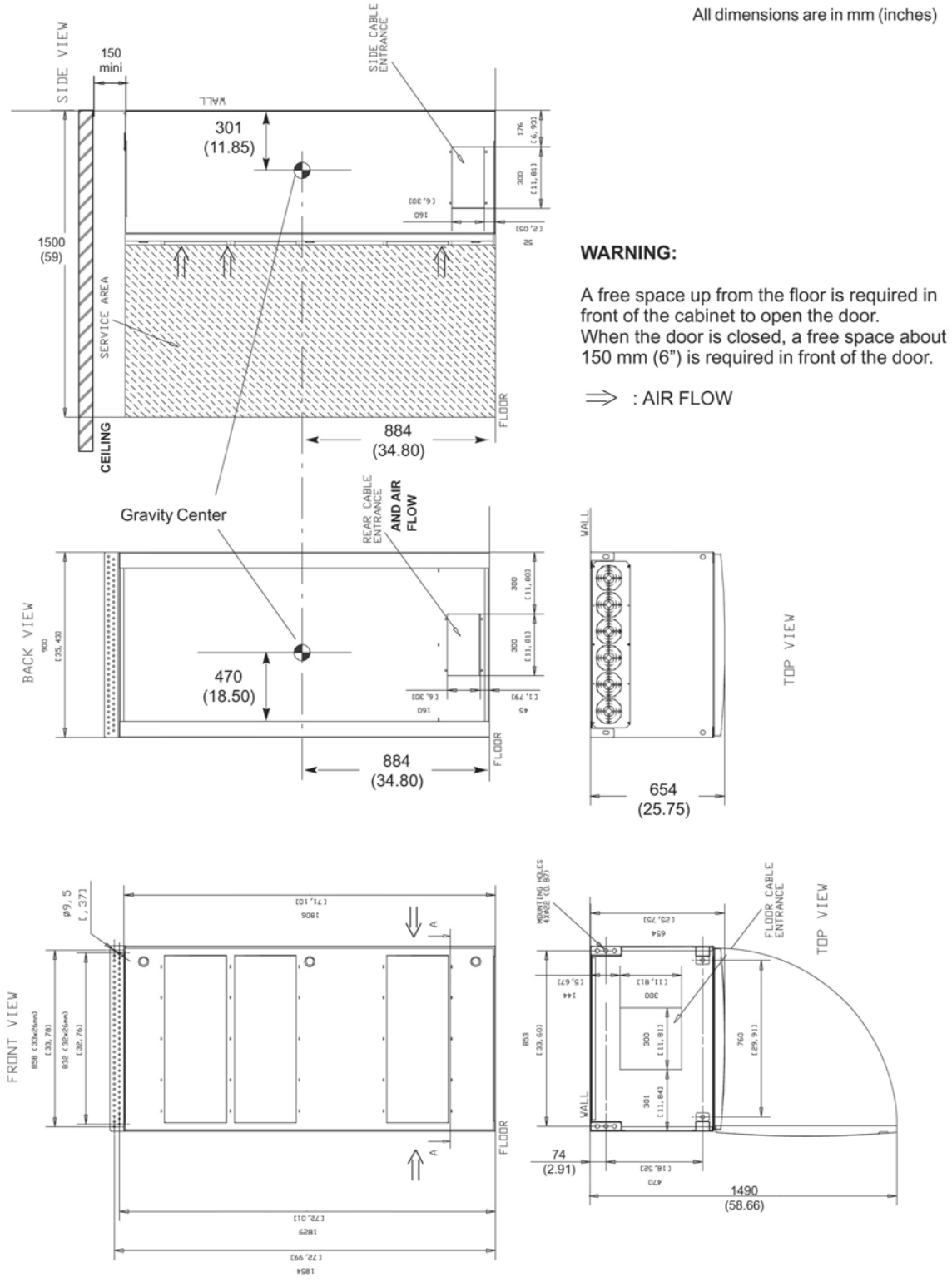

Illustration 5-14: C1 Cabinet Dimensions

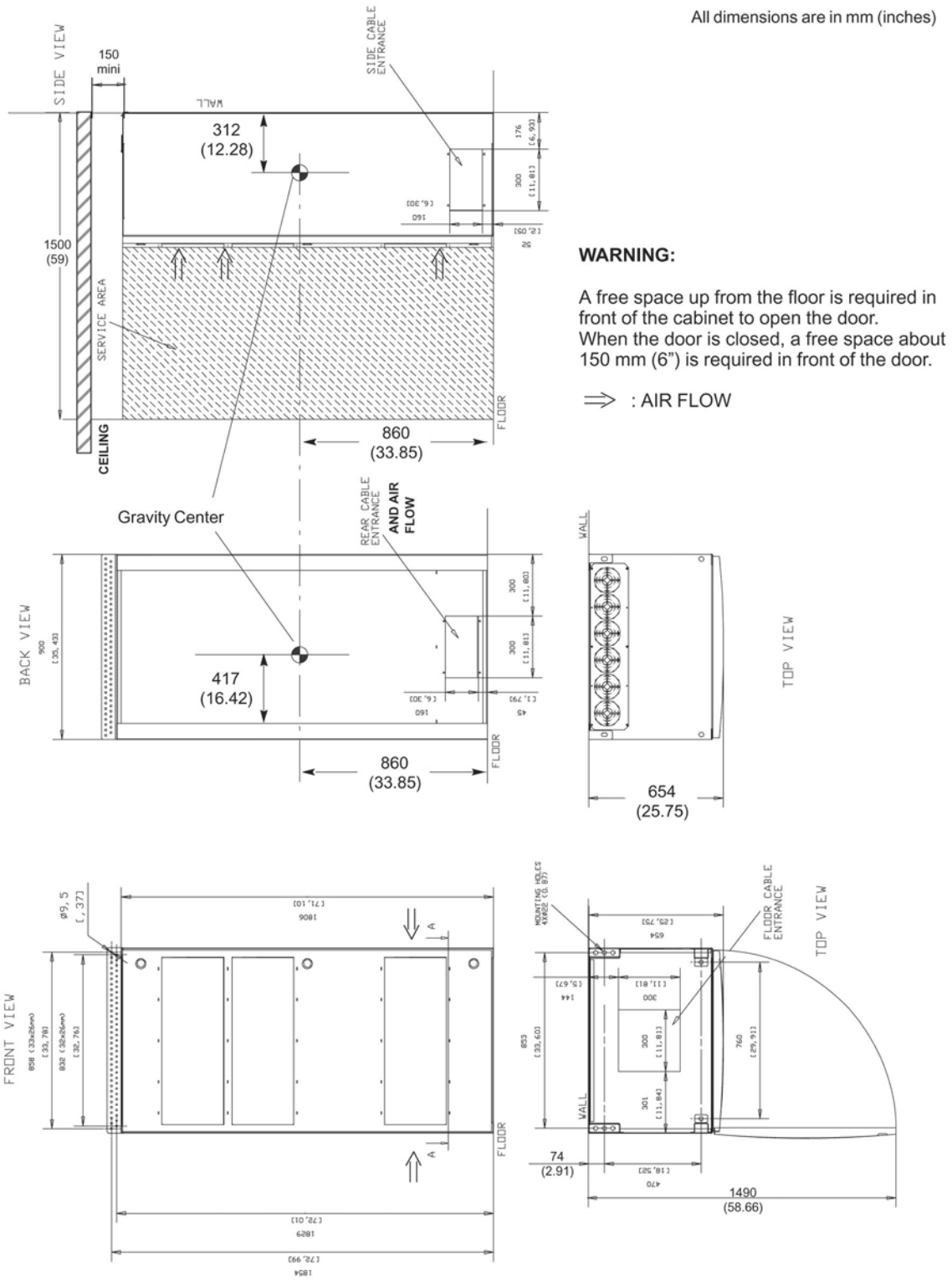

Illustration 5-15: Floor Space Diagram for Lytron Chiller

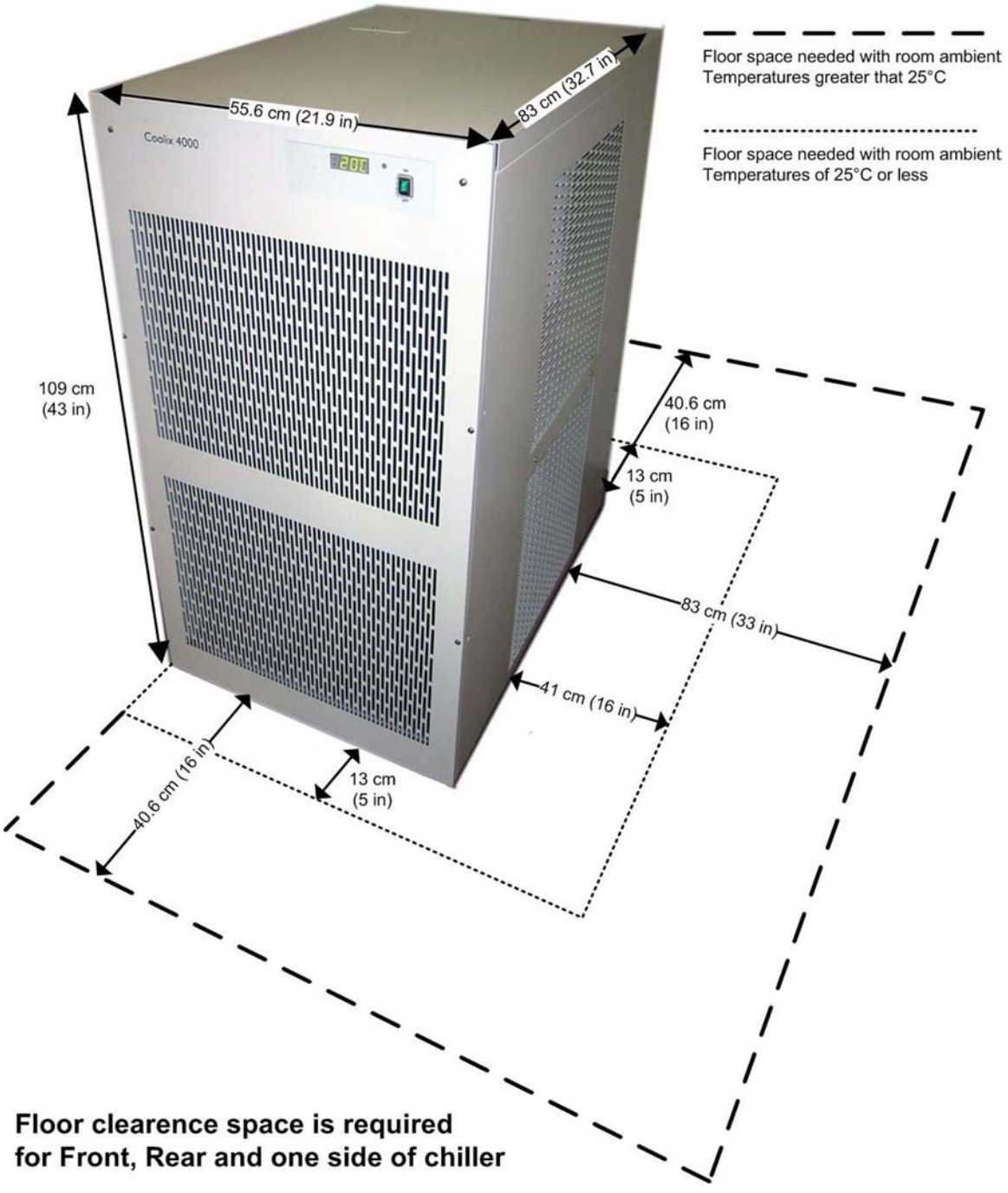

NOTICE

The maximum elevation difference between X–Ray Tube Housing and Chiller is around 3 meters (10 ft).

Exact dimensions of the Coolix 4000 chiller depend on model type. Required floor space depends on ambient room temperatures. When in doubt, allow for maximum floor space.

Illustration 5-16: Detector Chiller Thermo-Tek Dimensions

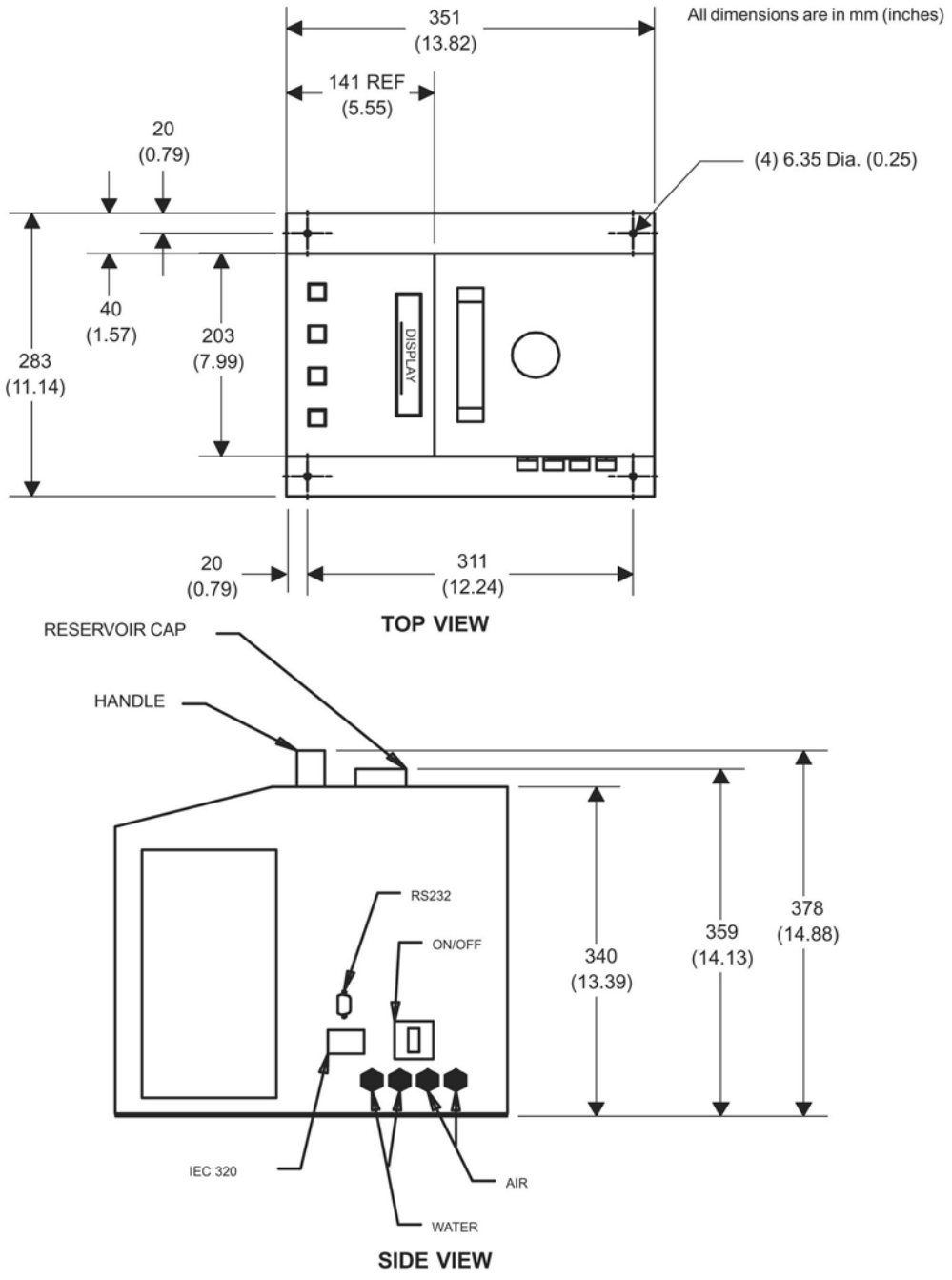

NOTICE

The chiller cannot be located more than 3 m (10 ft) below the detector

Illustration 5-17: Detector Chiller Thermo-Con Dimensions

All dimensions are in mm (inches)

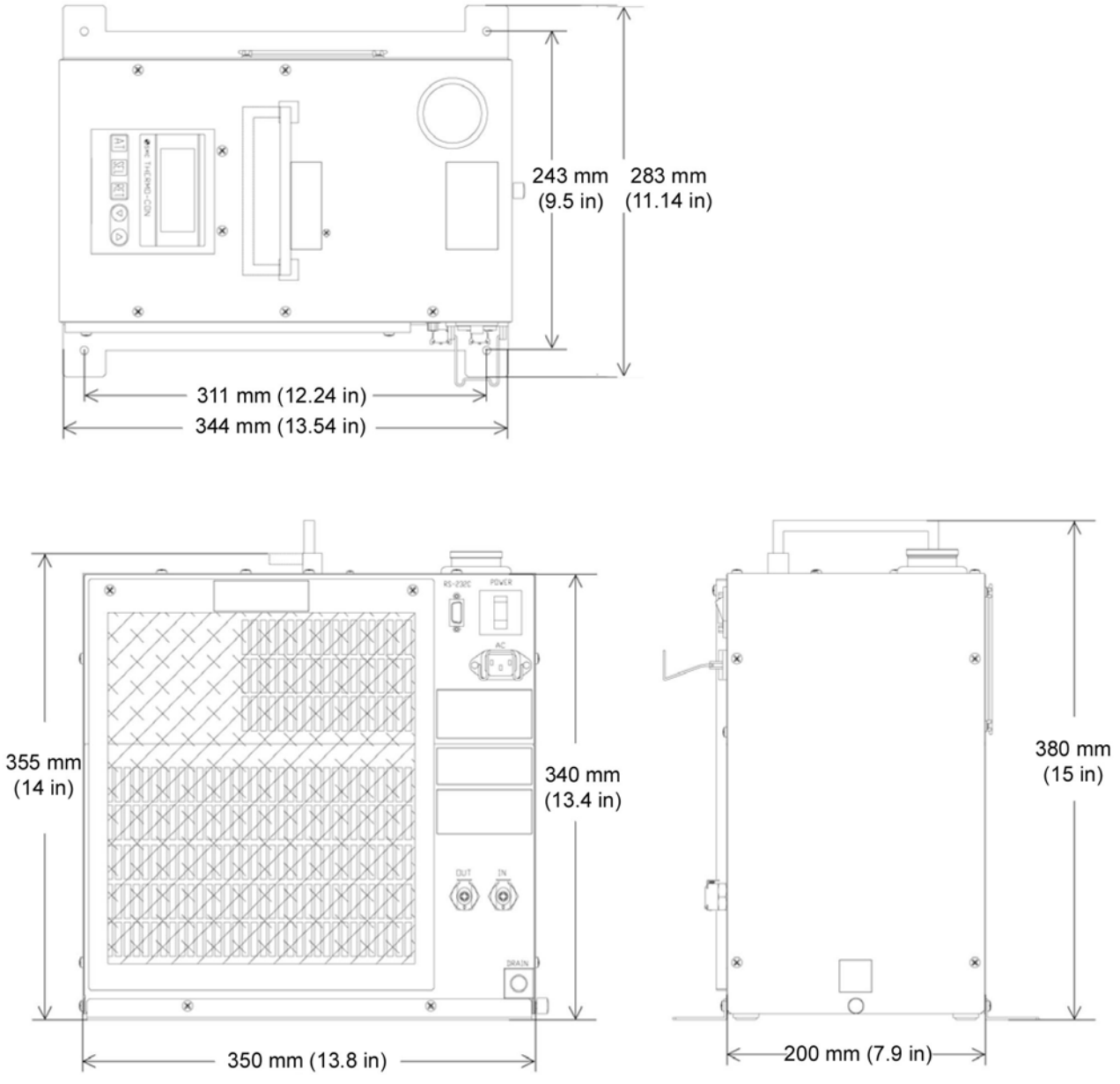

Illustration 5-18: Detector Chiller Thermo-Tek - Configuration & Orientation

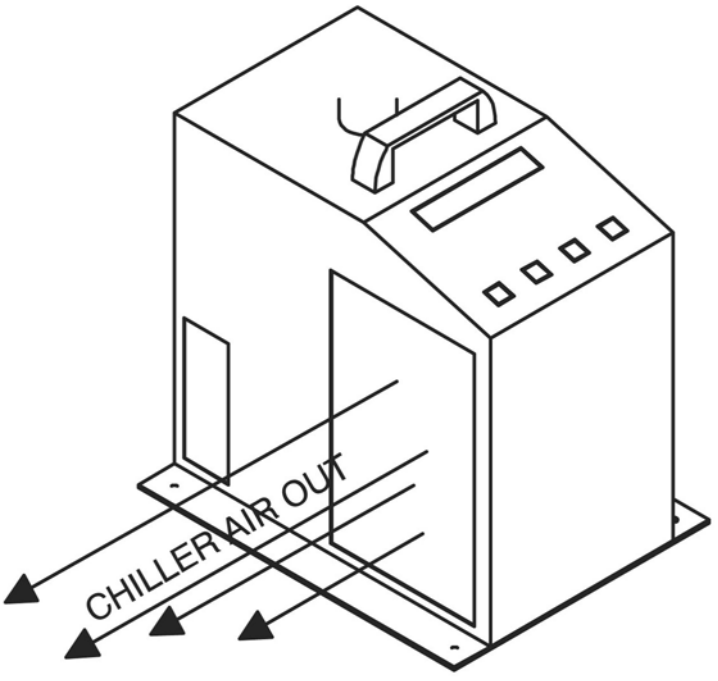

CLEAR AIR ZONE

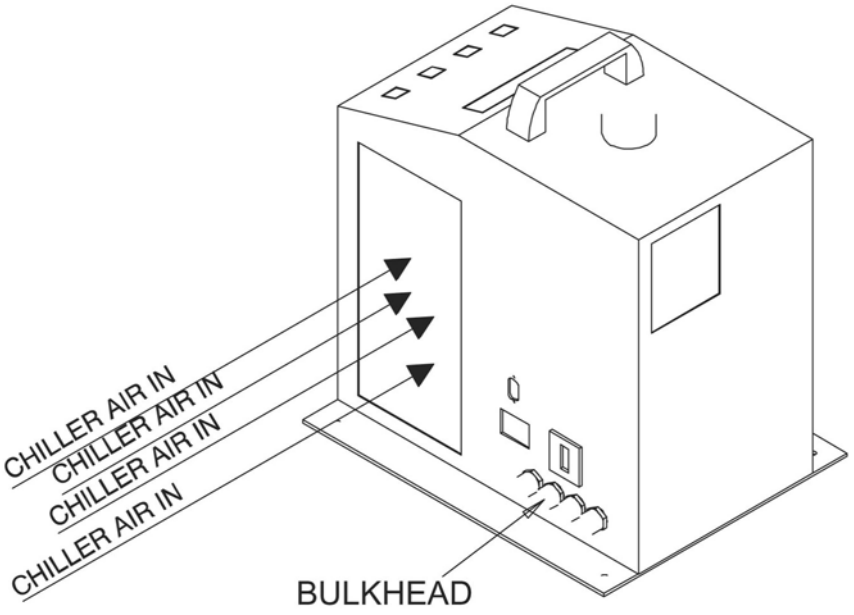

AIR FLOW & BULKHEAD LOCATION

Illustration 5-19: Detector Chiller Thermo-Con - Orientation

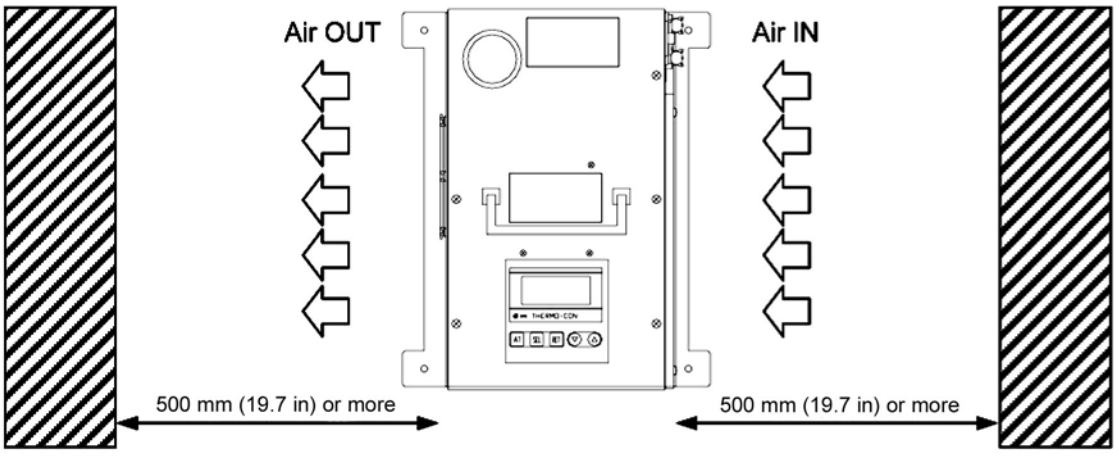

Illustration 5-20: Fluoro UPS UL Layout (Optional)

The left, right or back side of the UPS cabinet can be positioned against the wall.

The front side of the UPS cabinet must be accessible for maintenance operation.

Clearance around the front should be sufficient to enable free passage of personnel with the door fully opened.

Recommended minimum clearance between ceiling and top of the UPS should be 400 mm (16”) for proper cooling air exhaust.

Illustration 5-21: Fluoro UPS CE Layout (Optional)

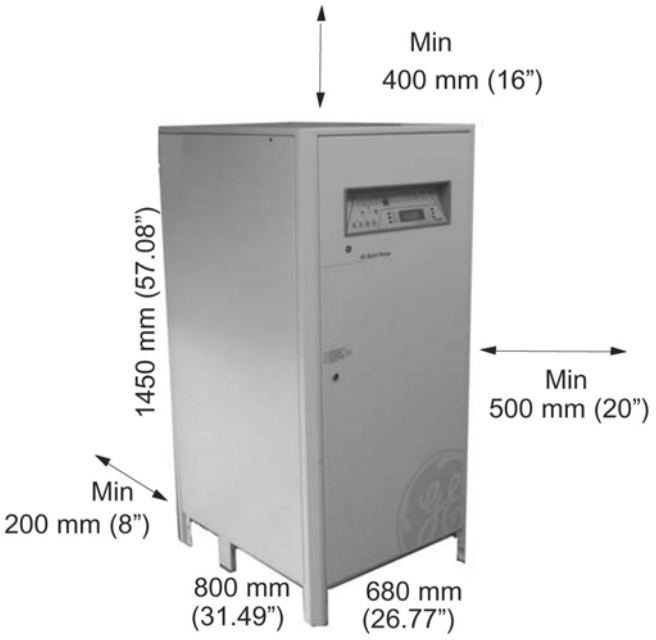

The UPS cabinet can be positioned against the wall but, in order to improve the ventilation and to make easier the maintenance operations for UPS and battery, we recommend a minimum distance of 200 mm (8”) from the wall.

The right side of the UPS cabinet must be accessible for maintenance operation.

Clearance around the front should be sufficient to enable free passage of personnel with the door fully opened.

Recommended minimum clearance between ceiling and top of the UPS should be 400 mm (16”) for proper cooling air exhaust.

Illustration 5-22: UPS IF Box (Optional)

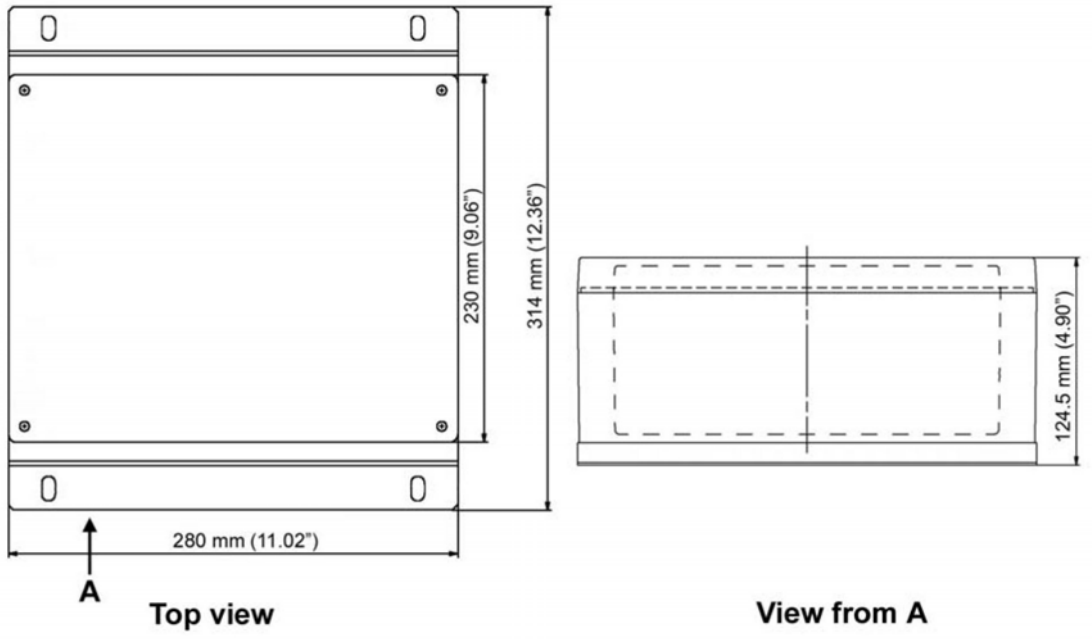

Illustration 5-23: Gas box outlets Omega IV

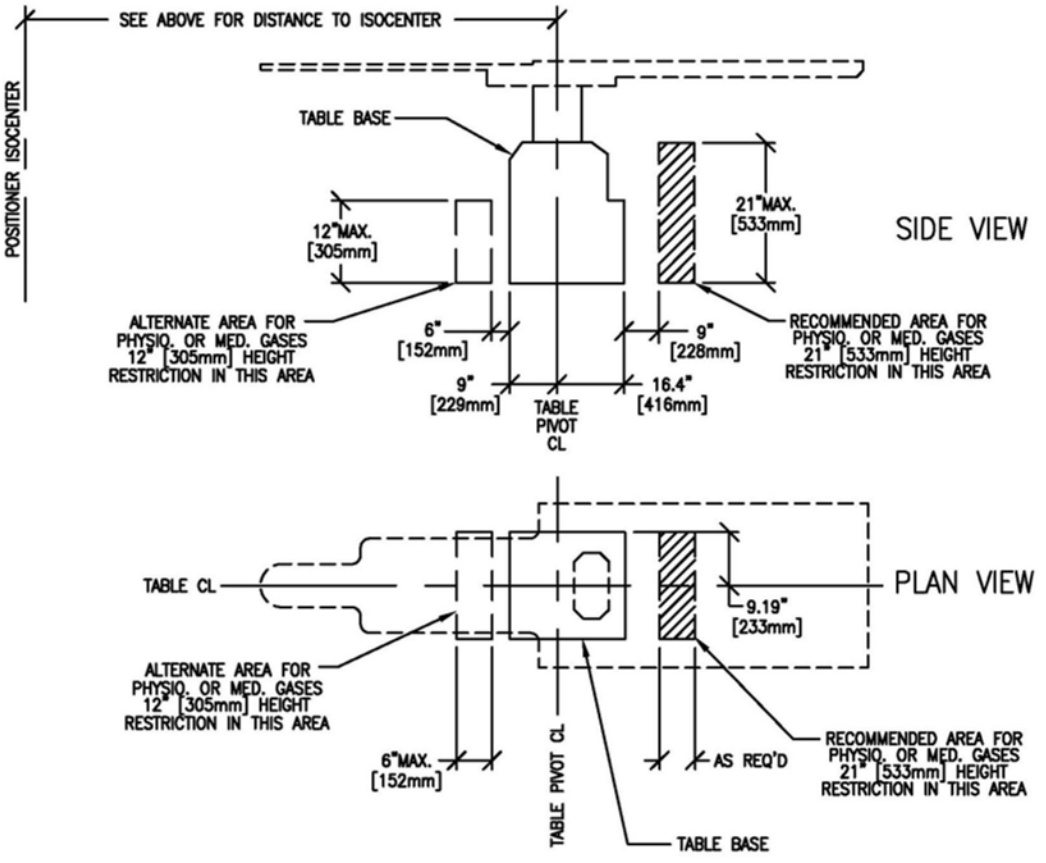

NOTE: With a Tilt Table, the minimum distance from table pivot to the medical Gas Box is 600 mm and the maximum dimensions of the medical Gas Box are :

- height = 305 mm
- width = 250 mm
- length = 500 mm

Illustration 5-24: Gas box outlets Omega V

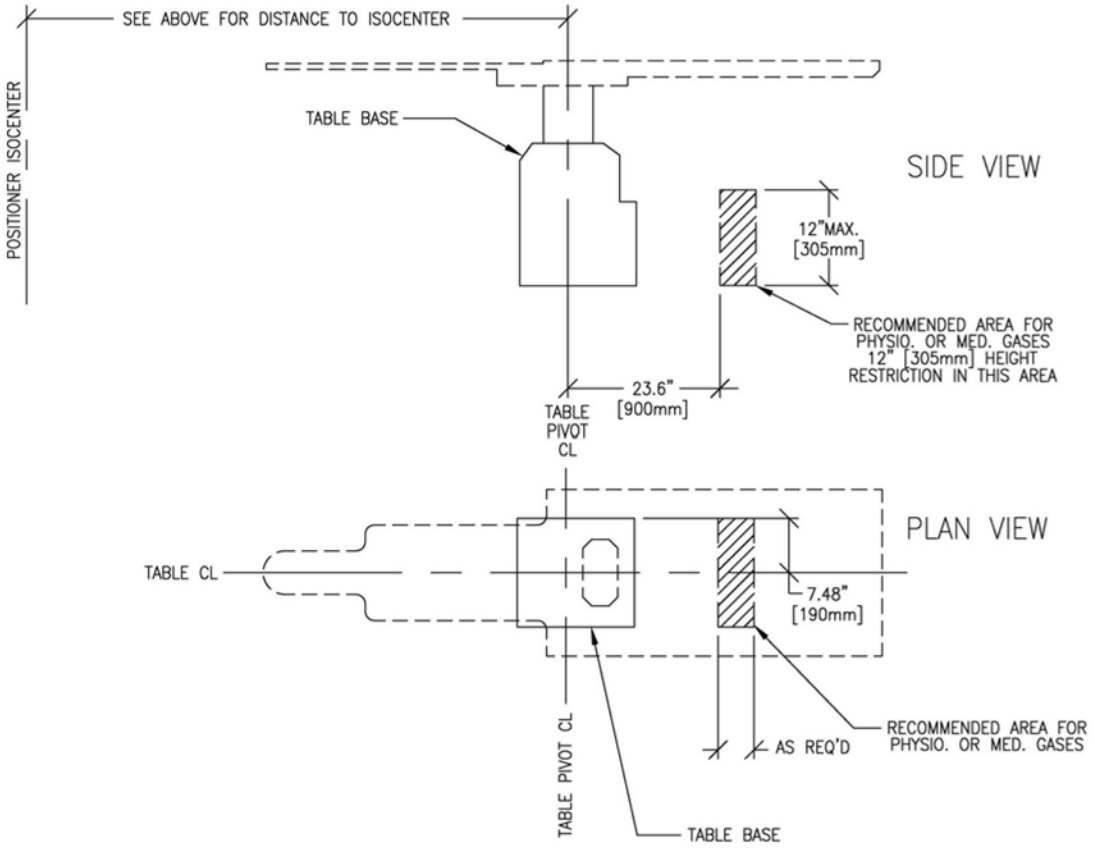

NOTE: With a Tilt Table, the minimum distance from table pivot to the medical Gas Box is 600 mm and the maximum dimensions of the medical Gas Box are :

- height = 305 mm
- width = 250 mm
- length = 500 mm

Illustration 5-25: DL Keypad Dimensions

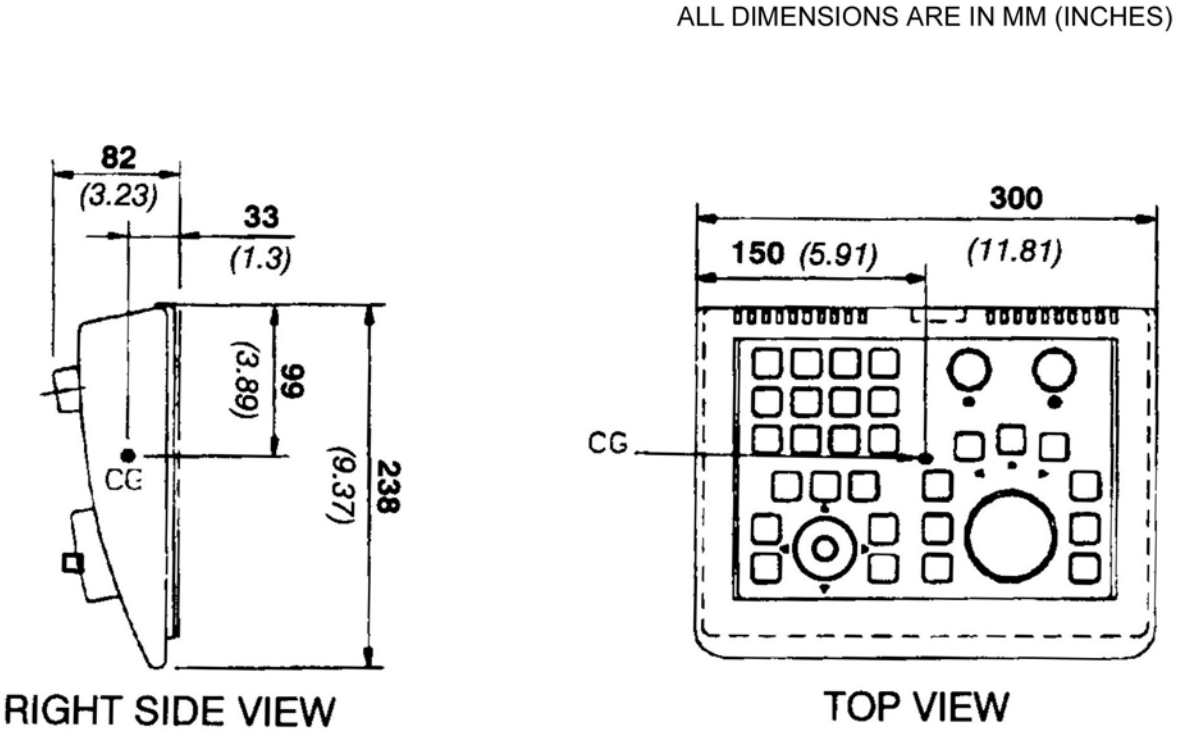

Illustration 5-26: DL Image Monitor Dimensions

All dimensions are in mm (inches)

Siemens monitors

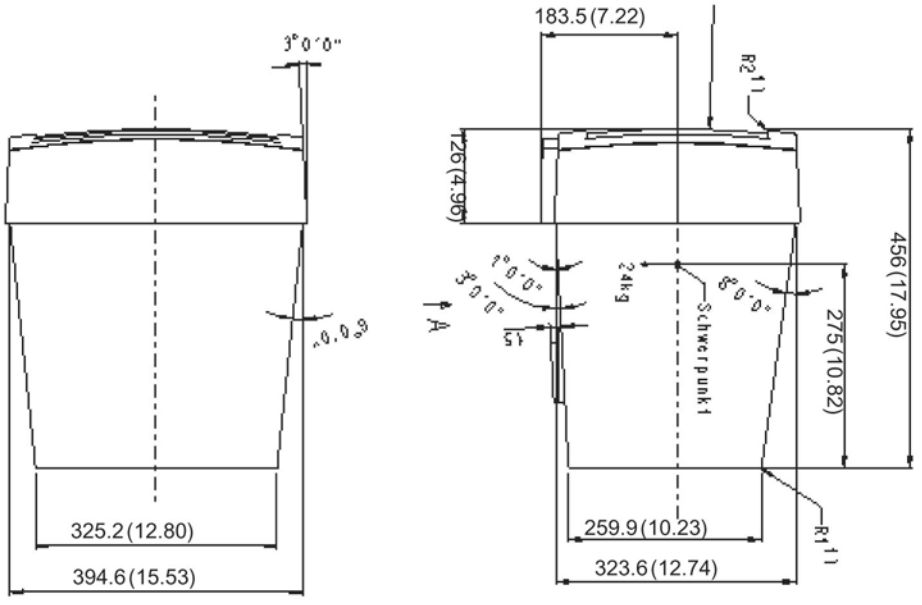

NEC 19" Flat panel

NOTE :
- CABINET COLOR : Dark Roof Gray
- TILT ANGLE : +25° ~ -5°
- SWIVEL : +170° ~ -170°
- HIGH ADJUST : 130mm
- PIVOT
- WEIGHT
  WITH STAND : APPROX 9.7 kg
  WITHOUT STAND : APPROX 6.3 kg

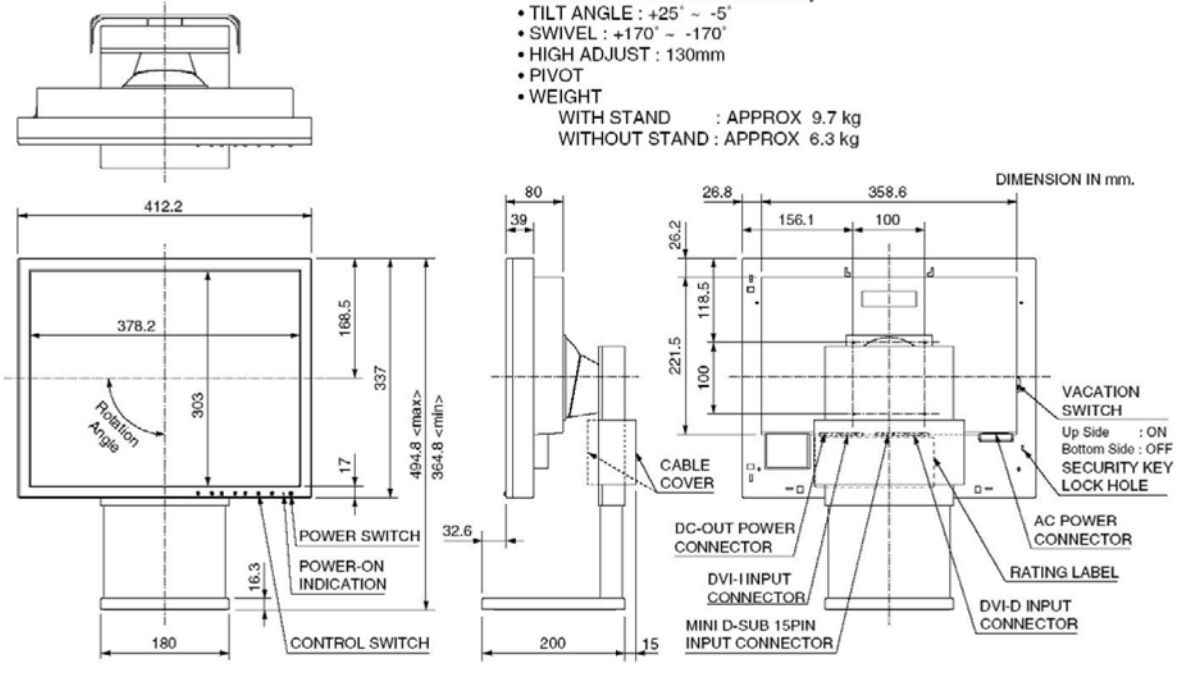

Illustration 5-27: VCR Mounting Holes Location

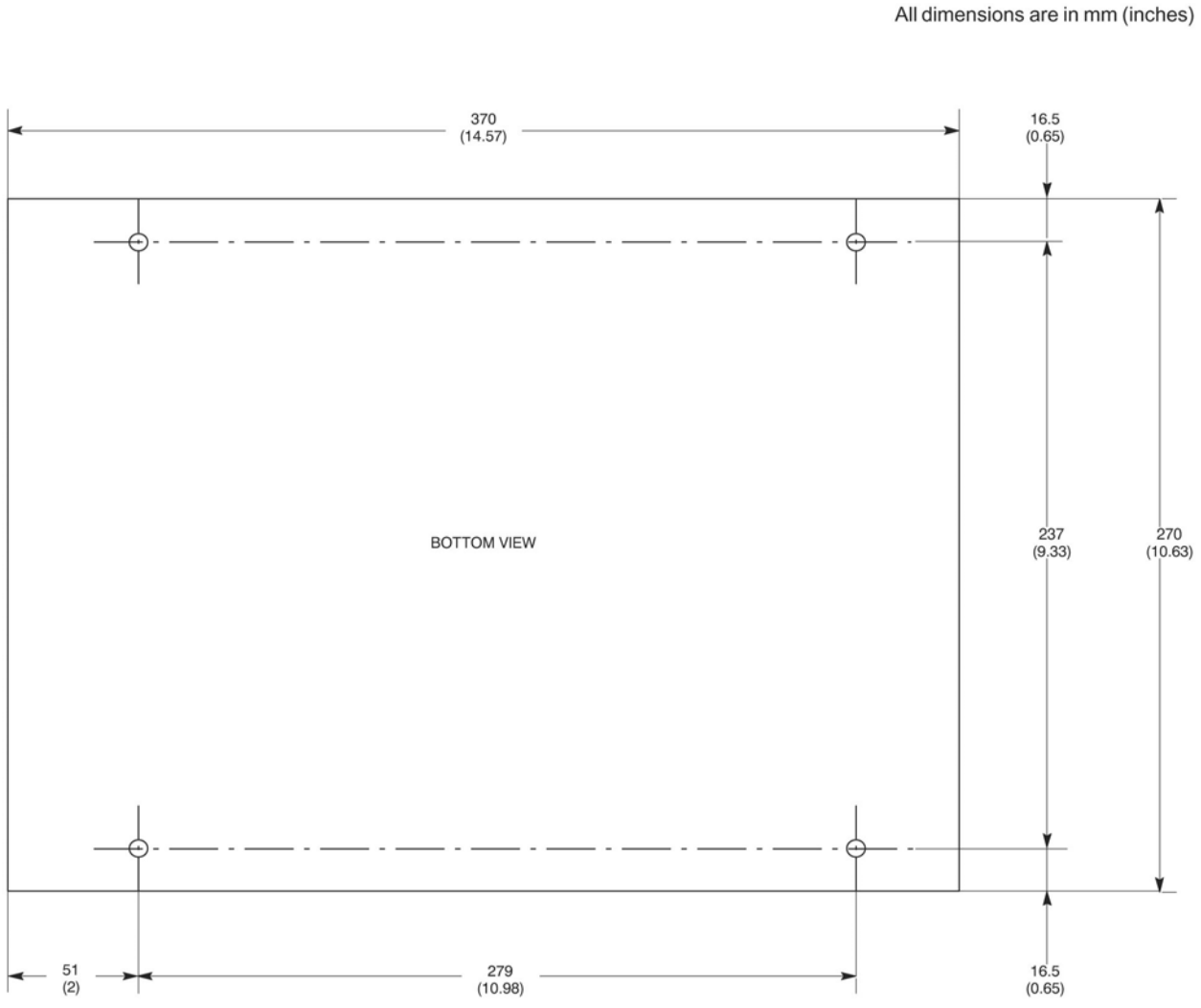

NOTE: Unscrew the four *feet* on the bottom. Use these four holes to fix the VCR. The mounting holes accommodate M3 x 10 mm screws. The holes are 0.4 inches (10 mm) deep.

2 Mounting Requirements

2.1 Floor Loading and Recommended Mounting Methods

See Table 5-2 . To obtain floor loading and recommended mounting methods for components not specified in Table 5-2 , refer to the appropriate component Pre-Installation Manual listed in Chapter 2, Section 3, Basic Innova LC System Compatibility.

Table 5-2:

PRODUCT OR COMPONENT	NET WEIGHT KG (LBS)	DIMENSIONS MM (INCHES)			LOAD BEARING AREA MM (INCHES)	WEIGHT/ OCCUPIED AREA	MOUNTING METHOD
		WIDTH	DEPTH	HEIGHT			
Liberty LC Positioner	750 (1655)	See Illustrations *INNOVA LC POSITIONER DIMENSIONS*: • Side view • Top view • Front view in Section 1, Dimension Drawings			Circle diameter 600 (23.62)		Recommended: • Through-Bolts (12) Alternates: • On Grade 5/8 in, Anchors (12) • Above Grade 3/4 in. Anchors (12) See Illustration 5-28 , Illustration 5-29 and Illustration 5-30
Table	590 (1300) See note 1	See illustrations in Section 1, Dimension Drawings • Omega IV • Omega V			571.5x429 (22.5x16.9)	2410 kg/m^2 (492.3 lb/ft^2)	Same as Innova LC Positioner See IMPORTANT NOTICE below.
	900 (1983) See note 1	Tilt			750x600 (30x24)	2000 kg/m^2 (409 lb/ft^2	
IMPORTANT NOTICE The Table baseplate or the System baseplate are mandatory to install the table (patient support). The Table must never be installed on grade.							
C2 Cabinet	299 (659)	See Illustration *C2 Cabinet Dimensions* in Section 1, Dimension Drawings			600x900 (23.63x35.44)	478 kg/m^2 (98 lb/ft^2)	
C1 Cabinet	506 (1115.5)	See Illustration *C1 Cabinet Dimensions* in Section 1, Dimension Drawings			600x900 (23.63x35.44)	838 kg/m^2 (172 lb/ft^2)	
COOLIX 4000	204 (450) See note 3	556 (21.9) See note 2/3	830 (32.7) See note 3	1090 (43) See note 3	Four casters	Not applicable	
Detector Chiller Thermo-Tek	13.6 (30)	See Illustration *Detector Chiller Thermo–Tek Dimensions* in Section 1, Dimension Drawings			283x351 (11.14x13.82)		
Detector Chiller Thermo-Con	14.6 (32.2)	See Illustration *Detector Chiller Thermo–Con Dimensions* in Section 1, Dimension Drawings			13.5x11.14 (344x283)		
Fluoro UPS UL (optional)	530 (1169)	690 (27.0)	800 (31.5)	1820 (70.1)		975 kg/m^2 (200 lb/ft^2)	Ground -mounted
Fluoro UPS CE (optional)	480 (1059)	680 (26.7)	800 (31.5)	1450 (57.1)		883 kg/m^2 (181 lb/ft^2)	Ground -mounted

Table 5-2: (cont'd)

PRODUCT OR COMPONENT	NET WEIGHT KG (LBS)	DIMENSIONS MM (INCHES)			LOAD BEARING AREA MM (INCHES)	WEIGHT/ OCCUPIED AREA	MOUNTING METHOD
		WIDTH	DEPTH	HEIGHT			
Fluoro UPS IF box (optional)	4 (9)	280 (11.02)	314 (12.36)	124.5 (4.9)			Wall-mounted
PDB US (4)	148 (326)	685 (27)	225 (9)	1850 (73)			Wall-mounted
PDB CE (4)	110 (242)	800	300	1200			Wall-mounted
EMI Filter enclosure CE (4)	<40	300	210	950			Wall-mounted
DL keypad	1.4 (3)	283 (11.55)	300 (11.8)	82 (3.25)			
DL LCD monitor	8.2 (18)	179 (7)	387 (15.2)	504 (19.8)			
VCIM	0.95 (2.09)	450 (17.7)	150 (5.9)	50 (2)			
Videostation VCR	12 (26.5)	370 (14.57)	270 (10.63)	144 (5.67)			
PIM (Ultrasound probe)	2 (4.4)	38	96	177			
Control Station	4 (8.8)	120	360	240			
Joystick	1 (2.2)	90	76	102			
Isolation transformer	7 (15.4)	97	267	171			
IVUS CPU	15 (33.1)	396	162	510			
IVUS Keyb. & mouse pad	1 (2.2)	NA	NA	NA			
IVUS monitor	15 (33.1)	420	432	240			
Image printer	6 (13.2)	158	184	18			
4-way Video Switch	1 (2.2)	44	222	241			

NOTE: (1) including patient weight.

NOTE: (2) Depth.

NOTE: (3) Maximum dimensions given. Exact dimensions depend on chiller manufacturer type.

NOTE: (4) Recommended supplier.

2.2 Positioner and Table Floor Mounting

The distances between the Innova LC Positioner and the Tables are critical for a proper clinical usage. For this reason, GEMS provides two floor mounting templates to ensure these components are properly placed in relation to one another.

Table 5-3:

Title	Illustration
Innova LC Positioner Floor Mounting Methods	Illustration 5-28 and Illustration 5-29
Cable Conduit For On-Grade Floor Anchor Kit	Illustration 5-3

Table 5-3: (cont'd)

Title	Illustration
Inner Base Plate For Above Grade Floor Anchor Kit	Illustration 5-31
Innova LC Positioner And Tilt Table Floor Mounting Template	Illustration 5-33 and Holes location in concrete floor illustration in Chapter 3, Section 3, Structural requirements.
Fixing Bolt Overview	Illustration 5-32

Illustration 5-28:

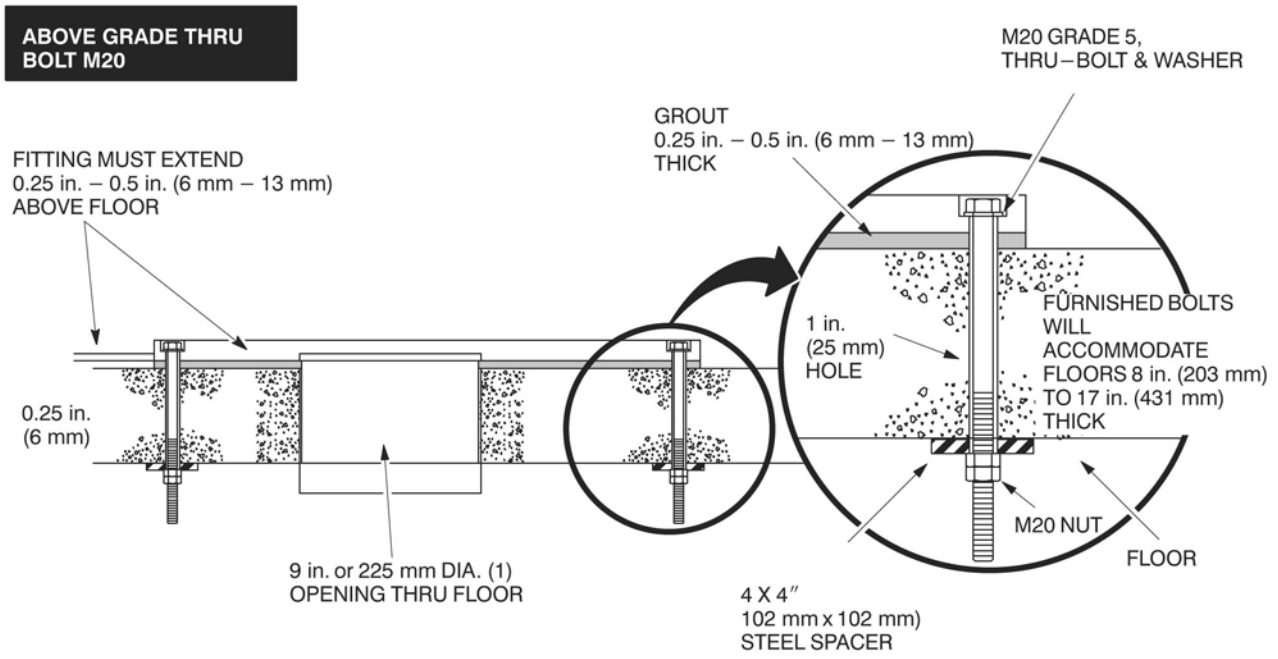

(1) The US or the METRIC standard for base plate inner

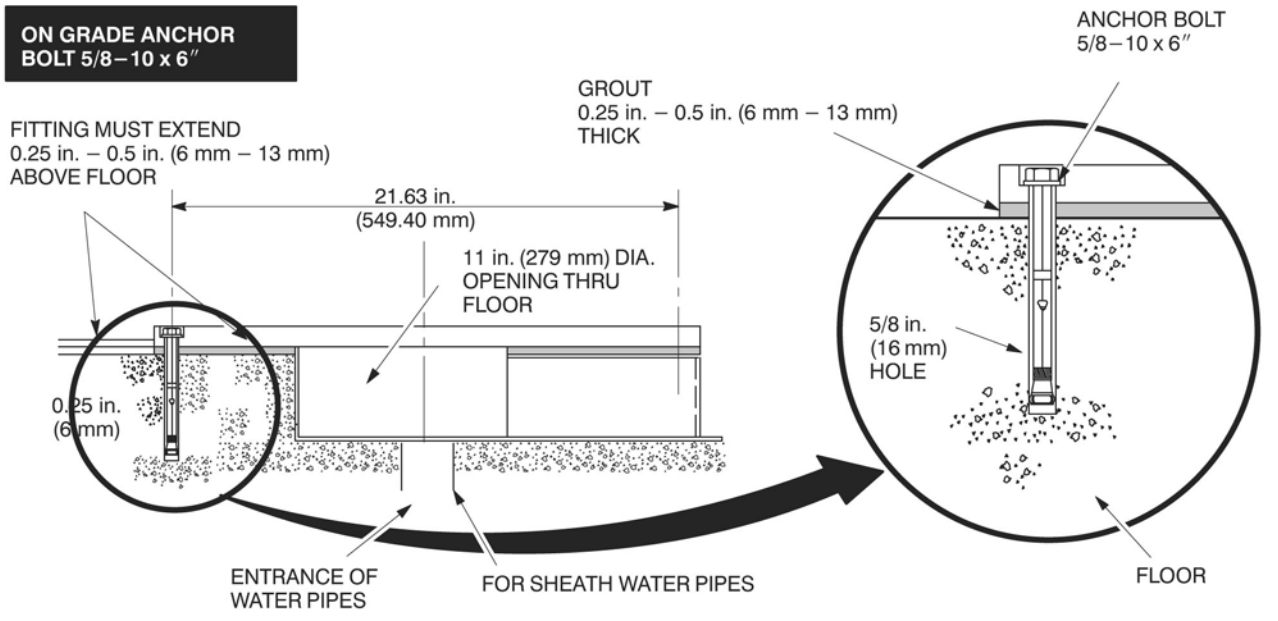

Illustration 5-29:

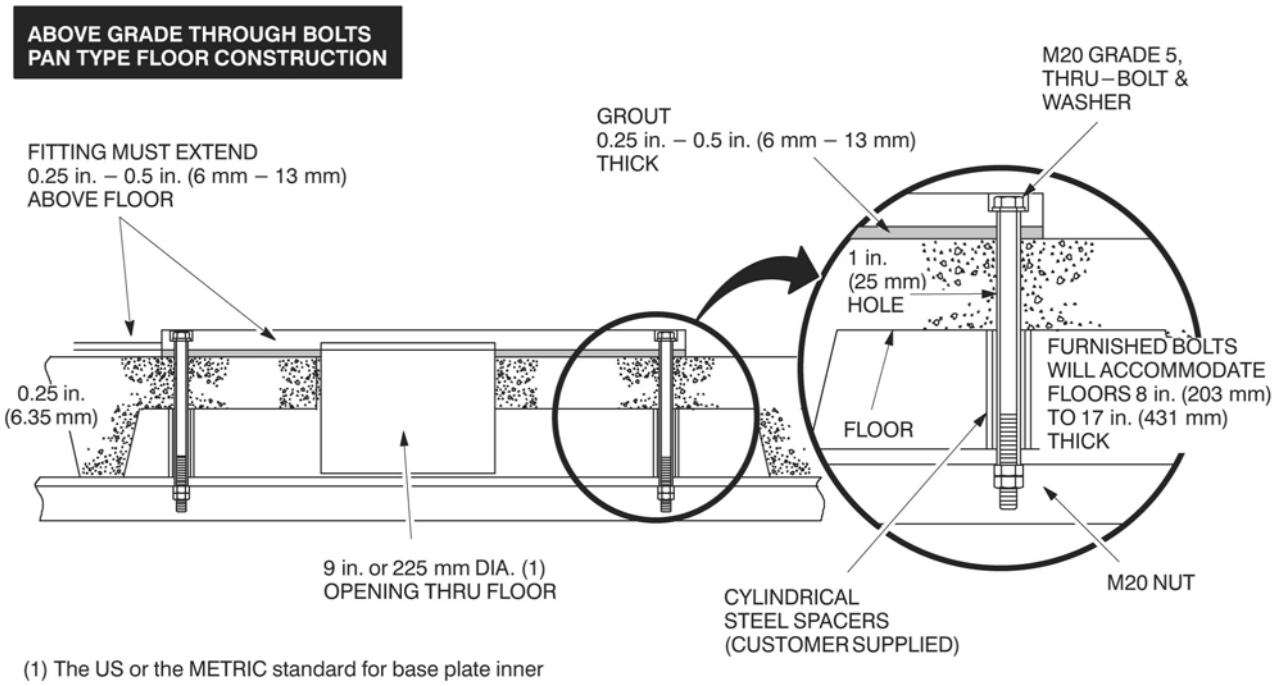

(1) The US or the METRIC standard for base plate inner

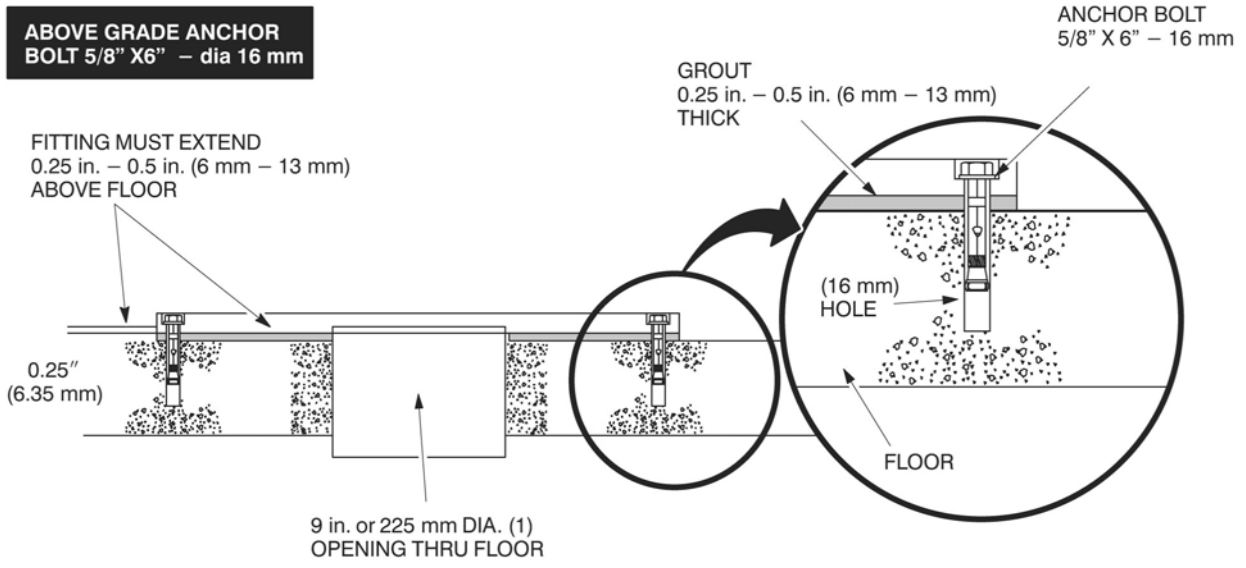

(1) The US or the METRIC standard for base plate inner

Illustration 5-30:

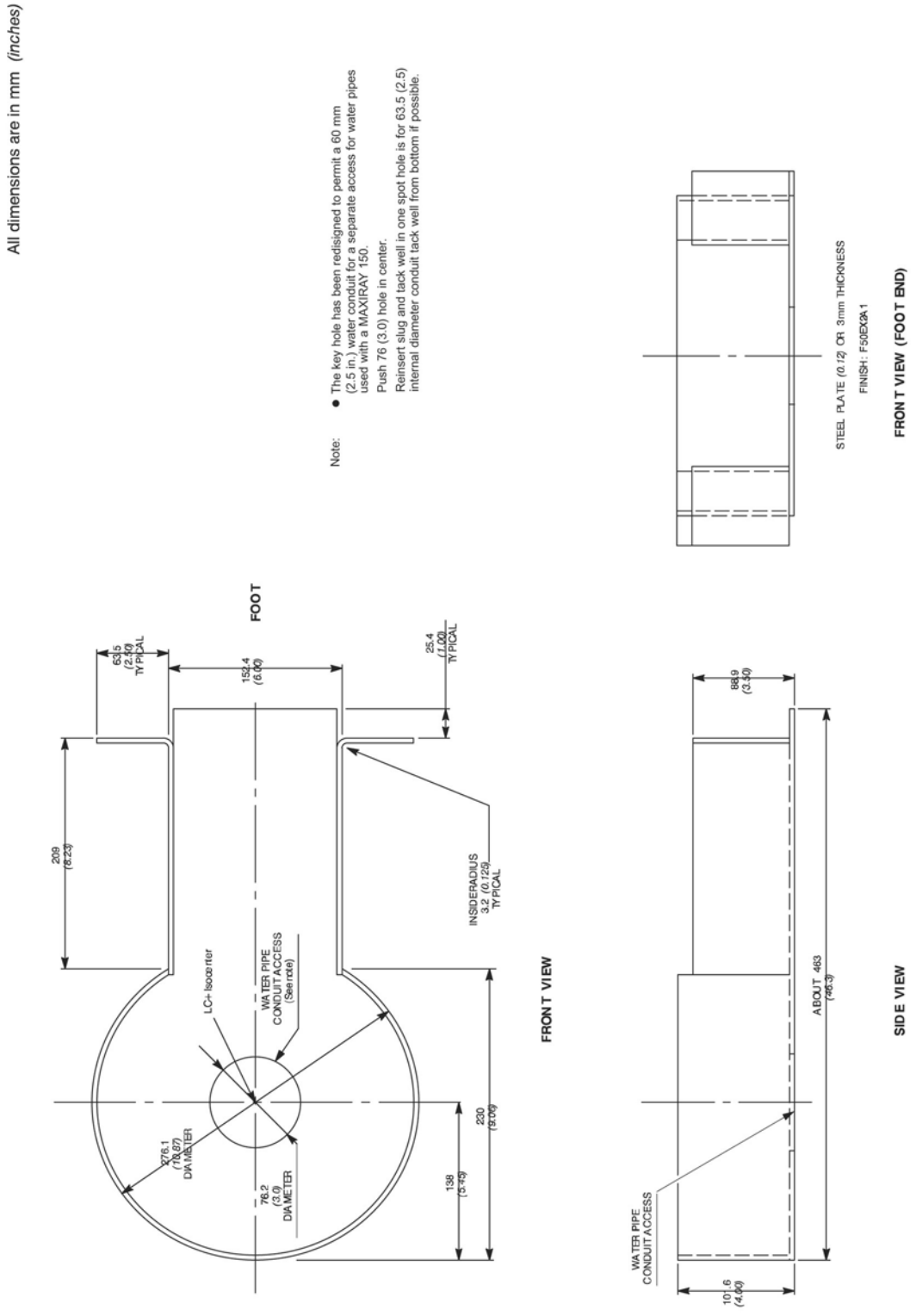

Illustration 5-31:

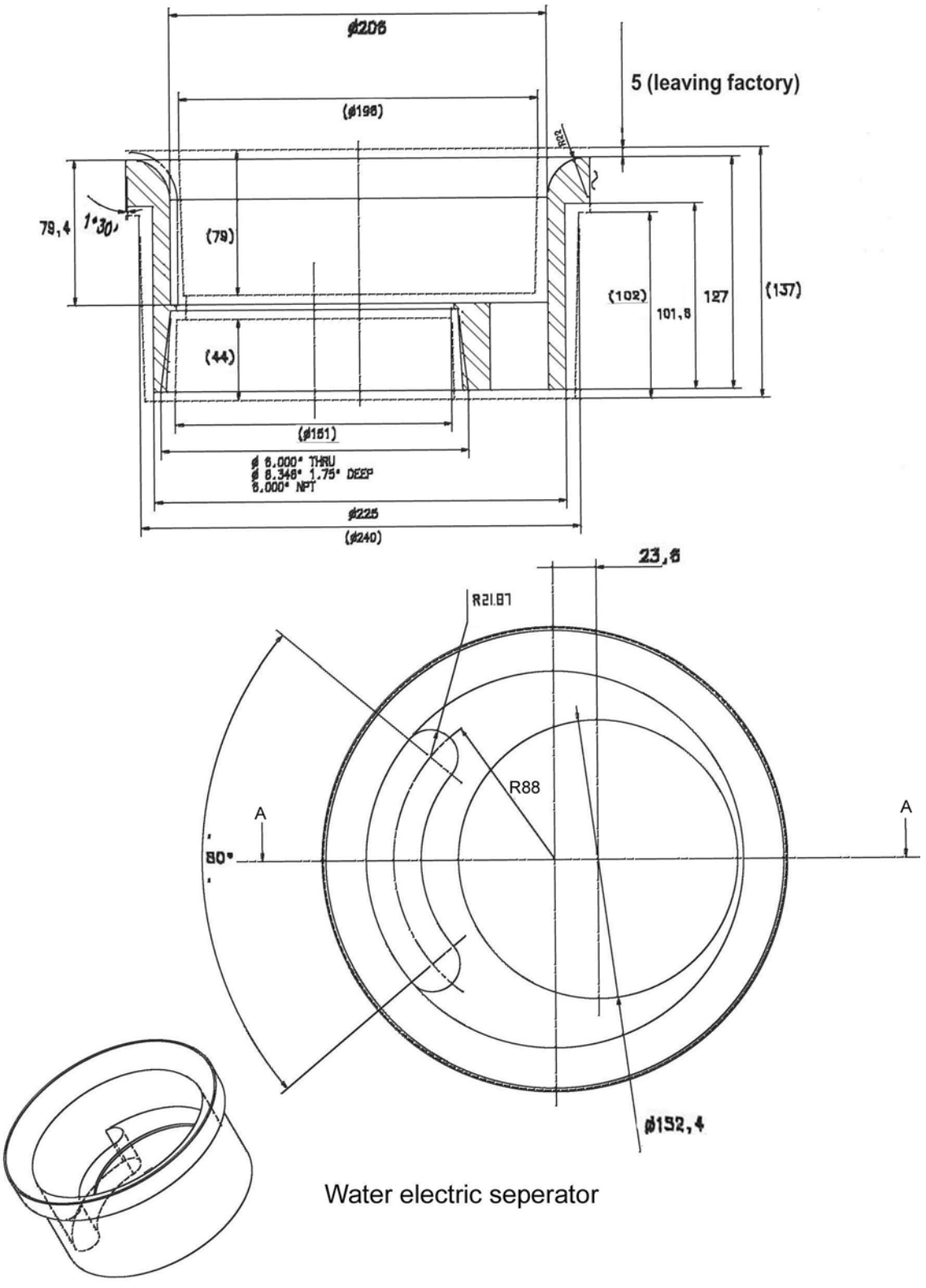

Illustration 5-32:

OMEGA/TILT BASEPLATE

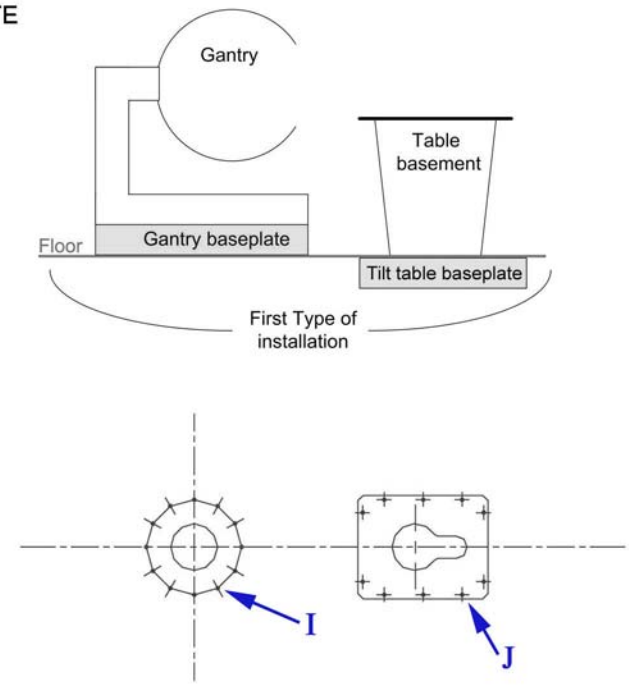

FLOOR PLATE

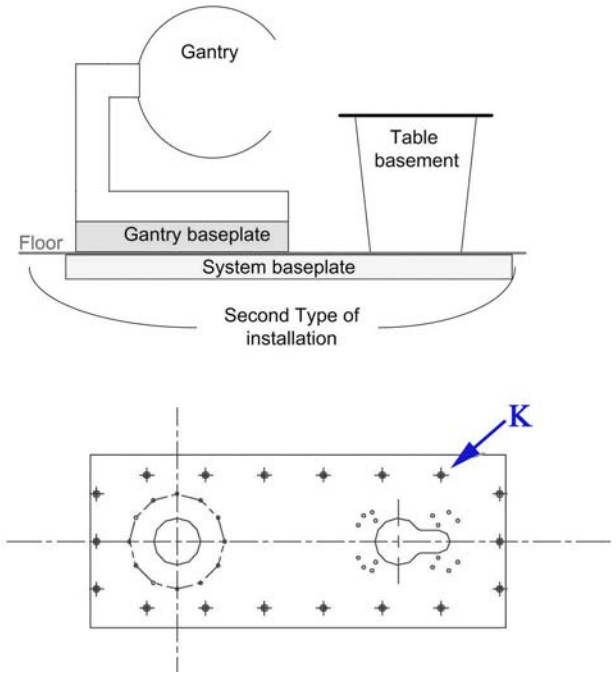

NOTICE

The Table baseplate or the System baseplate are mandatory to install the table (patient support).

The Table must never be installed on grade.

NOTE: For more details on Floor plate or Baseplates, refer to Illustration 5-33 and illustration Holes location in concrete floor in Chapter 3, Section 3, Structural Requirements.

NOTE: With any kind of fixation methods (Bolts M20, Mechanical anchors or Chemical anchors), the number of holes used mandatory is:

- Gantry baseplate : 12 max and 8 min holes used are acceptable
- Table baseplate : 10 max and 8 min holes used are acceptable
- Floor baseplate : 24 max and 12 min holes used are acceptable

we can have only 2 consecutive holes omitted.

NOTE: In case of floor plate configuration, the gantry baseplate shall be mounted onto the floor plate, but the table baseplate shall not be mounted on the floor plate.

Pull out efforts and recommendations about chemical anchors not provided by GE.

The following table provides the recommended chemical anchors for Omega/LC baseplates and for the floor plate ordered locally that they could be used instead of bolts provided by GE.

Table 5-4: Chemical anchors Pull out efforts and recommendations

	Gantry baseplate	Table baseplate Omega	Table Omega	Floor plate (to be ordered locally)
Mark	I on Illustration 5-32	J on Illustration 5-32	A on Illustration 5-33	K on Illustration 5-32
Pull out effort	736 daN per bolt if 12 used and 1992 daN per bolt if 8 used	1120 daN per bolt if 10 used and 2000 daN per bolt if 8 used	4432 daN per bolt with 4 bolts	272 daN per bolt if 24 used and 2008 daN per bolt if 12 used
Number of holes in the plate	12 max (8 min mandatory)	10 max (8 min mandatory)	4 mandatory	24 max (12 min mandatory)
Recommended chemical anchors example 1	Supplier HILTIHVU adhesive capsule + HAS Anchor rod	Supplier HILTIHVU adhesive capsule + HAS Anchor rod	Supplier HILTIHVU adhesive capsule + HAS Anchor rod	Supplier HILTIHVU adhesive capsule + HAS Anchor rod
Threaded rod	M16 A4-70 / 333 131 5/8	M20 A4-70 / 333 135 3/4	M20 A4-70 / 333 135 3/4	M16 A4-70 / 333 131 5/8
Hole diameter in the floor	18 mm (11/16 in)	24 mm (7/8 in)	24 mm (7/8 in)	18 mm (11/16) in
Hole depth in the floor	125 mm (5 in)	170 mm (6-5/8 in)	170 mm (6-5/8 in)	125 mm (5 in)

Table 5-4: Chemical anchors Pull out efforts and recommendations (cont'd)

	Gantry baseplate	Table baseplate Omega	Table Omega	Floor plate (to be ordered locally)
Minimum floor thickness	180 mm (7 in)	220 mm (8-1/2 in)	220 mm (8-1/2 in)	180 mm (7 in)
Max Tightening Torque	80 N.m (59 ft-lb)	150 N.m (110 ft-lb)	150 N.m (110 ft-lb)	80 N.m (59 ft-lb)

NOTE: The floor plate ordered locally needs to be in steel.

Refer to supplier technical documents for all specification and installation data about chemical anchors.

Illustration 5-33: Gantry and table mounting holes.

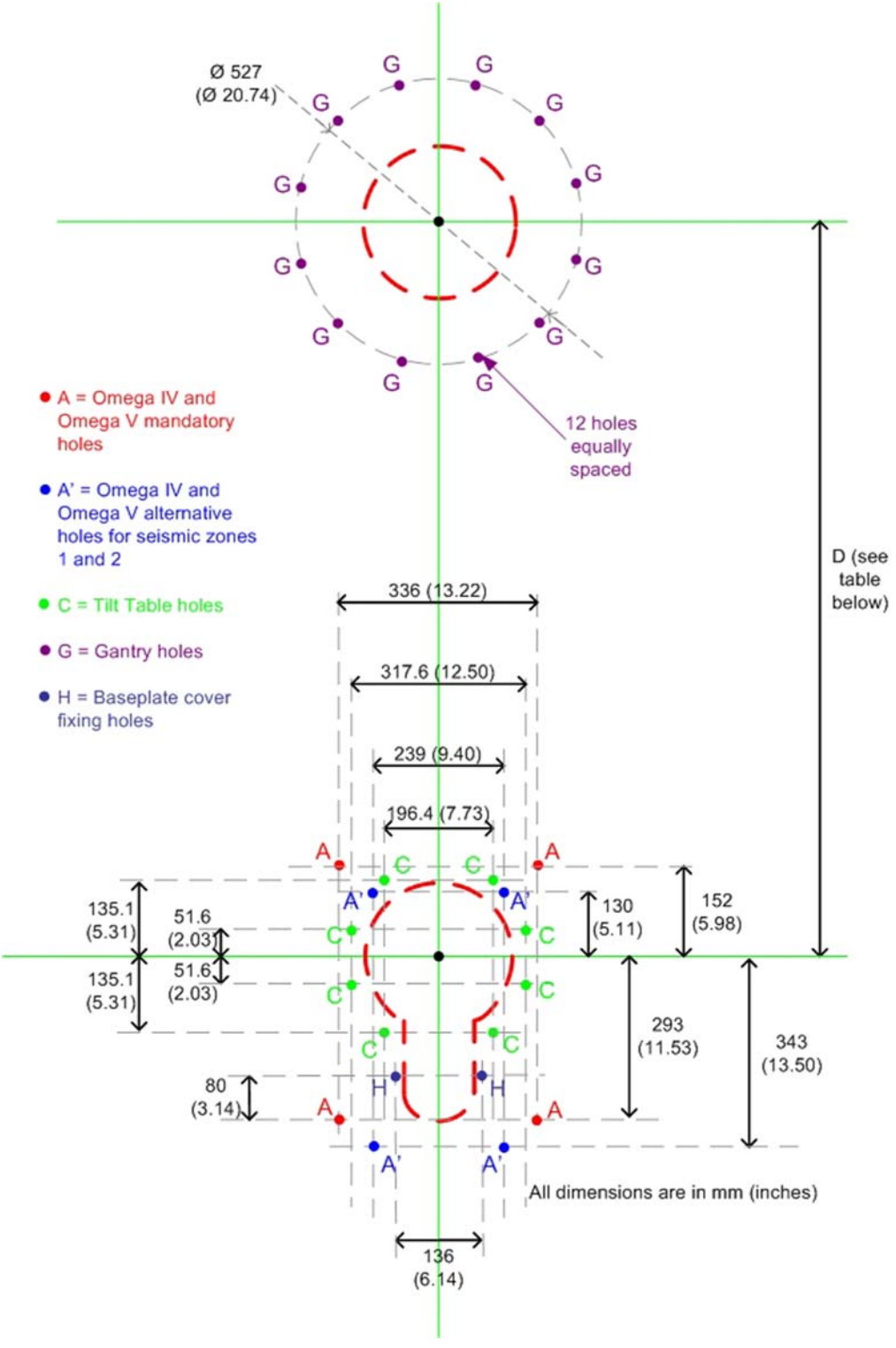

Table 5-5: D distance

	ANGIO / CARDIO	CARDIO / NEURO
Omega IV Compact	NA	1395 mm (54.9 in)
Omega V Long	1278 mm (50.3 in)	1395 mm (54.9 in)
Omega V non motorized Long	1278 mm (50.3 in)	1395 mm (54.9 in)
Tilt Table	1278 mm (50.3 in)*	1278 mm (50.3 in)*

NOTE: * in case of an upgrade, the Tilt Table is positioned at same position as the replaced Omega Table

2.3 Innova LC Positioner and Omega/Tilt Table Floor Preparation Kits (GEMS supplied)

Illustration 5-34:

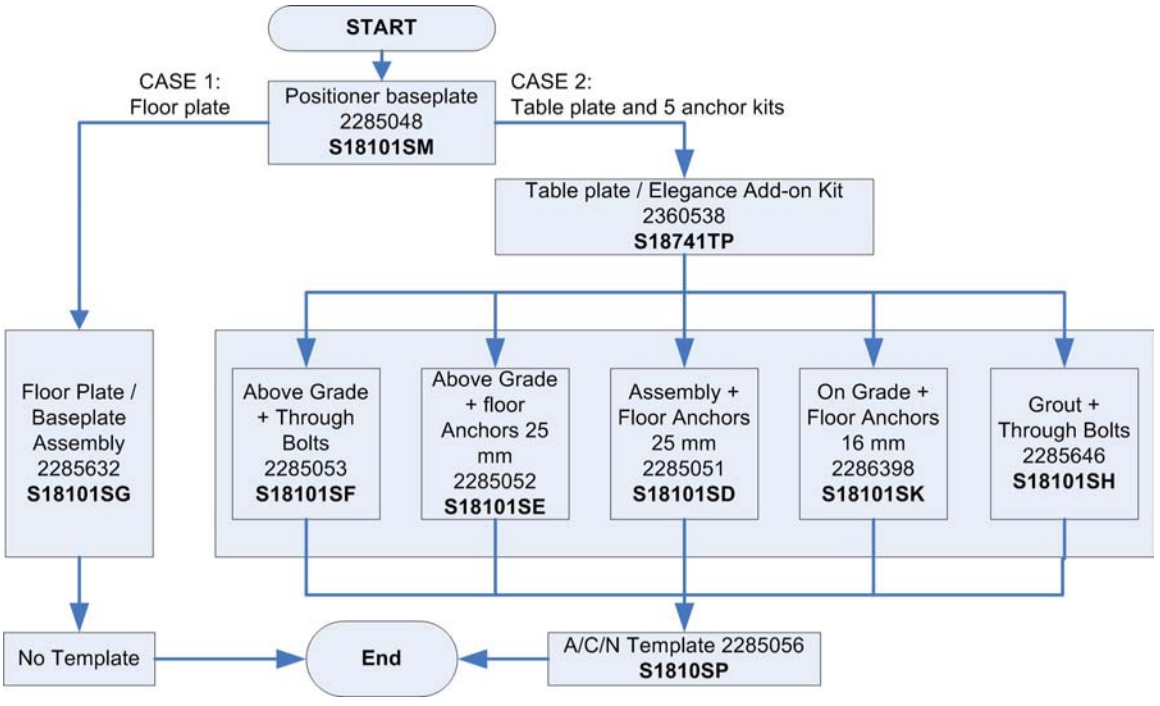

All GE supplied vascular system floor preparation are contained in catalog. There are some additional gantry/table mounting kits based on each mounting method: through bolts or floor anchors.

NOTICE

The Table baseplate or the System baseplate are mandatory to install the table (patient support).

The Table must never be installed on grade.

The Omega/Tilt Table baseplate is recommended if a future Omega to Tilt table upgrade is to be considered.

- Base plate assembly (mandatory) 2285048 – Refer to Table 5-6
- Elegance Add–On Kit 2360538 (Innova 2100–IQ/3100/4100 only) – (refer to Table 5-7) (Floor base plate assembly 2285632 shall be ordered).
- Assembly and separation (Select kit) 2285050 – Refer to tables, Section 2.3
  - Above grade, Floor anchors without insert – 2285051.
  - Through bolts without insert – 2285646.
  - On grade, Floor anchors – 2286398.
  - Above grade, Floor anchors and insert – 2285052.
  - Through bolts and insert – 2285053.

  - Floor plate / Base plate Assembly – 2285632.
- Templates (select kit) – 2285054 – Refer to Section 2.4
  Angio/Cardio/Neuro templates – 2285056 (containing 2185979, 2127792 and 2360133 Innova 2000 and Innova 2100–IQ/3100/4100 templates).

2.3.1 2285048 - Base Plate Assembly

Table 5-6:

Item	Name	Part #	Description	Quan.	Notes
	Baseplate	2285059	12 Hole Floor Baseplate	1 pc	
	Lift Plate	2290939	Lifting Straps	2 pc	
	Hex Head Screw	5166535	Hex Head Screw 1/2”-13UNC L1 1/2” 12.9 Black	2 pc	
	Grease	2295599	Lithium grease lubricant 100g	2 pc	
	Doc	2230112-1-100	Vascular Gantry Baseplate and Table	1 pc	
	Doc	2229297-100	LCA/LCV+/LC+ System Baseplate and Omega IV/V/EP Table Floor Preparation	1 pc	
	Doc	2290880-2-100	Innova Pre-Installation Kit Install Procedure	1 pc	

NOTE: The 12 LC baseplate mounting screws are delivered with the system's LC Gantry. These screws are:

- cap screws 5166774; Screw Socket Head Cap 1/2”-20 UNF L1 1/2” 12.9 Black (used when installing new system on old baseplate (US threads))
- cap screws 2300939; Hex Head Cap screw; M12 40/40 Class 12.9 Black ; used to attach L-brackets on table shipping pallet to positioner dolly for table positioning (used when the new baseplate is metric threads)

2.3.2 2360538 – Elegance Add–On Kit

Table 5-7:

Item	Name	Part #	Description	Quan.	Notes
	Omega / Elegance common Plate	2361993	Plate to be anchored under the table	1 pc	
	Hex Screws	5120708	Screw M16x40x40 Inox A4-70 Pass	10 pc	4 only are used for Omega
	Washer, Flat	99125091	Washer Plain - Large 17 mm/40 mm	10 pc	
	Floor Anchor	46-302265P1	5/8 diameter 6” floor anchor bolts	6 pc	
	Dowel	2290937-2	Wood Dowel; 16 mm diameter	6 pc	
	Bolt, Hex	2296892	Through bolt M20-500-400	6 pc	
	Washer, Flat	99142204	Washer plain 21 mm/40 mm for Through Bolts; one for each bolt	6 pc	
	Plate	2290941	Special Steel Spacer Plate; 4 in. x 4 in. (102 mm x 102 mm); one for each bolt	6 pc	
	Nut, Hex	99141607	Hex Nut M20 STL galvanized, two for each bolt	12 pc	
	Dowel	2290937	Wood Dowel; 24 mm diameter	6 pc	
	Cap	5130979	Plastic Cap	10 pc	
	M16 Plug	5130982	Plastic Plug	6 pc	see note *

NOTE: * M16 plug is needed only when Omega V table is replaced by Elegance table. Therefore, these plugs have to be kept (bag let inside the table base) until Elegance is installed (no need to fit them with Omega table).

2.3.3 2285050 – Assembly and separation select kit

2.3.3.1 2285051 – Above grade, Floor Anchors without insert

Table 5-8:

Item	Name	Part #	Description	Quan.	Notes
	Floor Anchor	46-302265P1	Floor Anchor Bolt; 5/8 - 10x6” - (16 mm) drilling. (16 mm) drilling. 12 anchors for LC Positioner and 4 anchors for Table	16 pc	Above Grade anchor mounting method hardware
	Grout assy	2285055	- 10 kg Powdered Mortar Ardex K-15 - RTV Silicon Rubber Adhesive - 18 mm making tape adhesive - Open cell foam	1 kit	Used in constructing LC Positioner grout dam
	Dowel	2290937-2	Wood Dowel; (16 mm) diameter	12 pc	

2.3.3.2 2285646 – Through bolts without insert

Table 5-9:

Item	Name	Part #	Description	Quan.	Notes
	Bolt, Hex	2296892	Through Bolt; M20 - 500-400 12 bolts for LC Positioner and 4 bolts for Table	16 pc	Through Bolt mounting method hardware
	Washer, Flat	99142204	Special Flat Washer for Through Bolts; one for each bolt	16 pc	same as above
	Plate	2290941	Special Steel Spacer Plate; 4 in. x 4 in. (102 mm x 102 mm); one for each bolt	16 pc	same as above
	Nut, Hex	99141607	Hex Nut M20 STL galvanized two for each bolt	32 pc	same as above
	Grout assy	2285055	- 10 kg Powdered Mortar Ardex K-15 - RTV Silicon Rubber Adhesive - 18 mm making tape adhesive - Open cell foam	1 kit	Used in constructing LC Positioner grout dam
	Dowel	2290937	Wood Dowel; 24 mm diameter	12 pc	

2.3.3.3 2286398 – On grade, Floor anchor

Table 5-10:

Item	Name	Part #	Description	Quan.	Notes
	Floor Anchor	46-302265P1	Floor Anchor Bolt; 5/8-10 x 6 in. 12 anchors for LC Positioner and 4 anchors for Table	16 pc	On Grade anchor mounting method hardware
	Grout assy	2285055	- 10 kg Powdered Mortar Ardex K-15 - RTV Silicon Rubber Adhesive - 18 mm making tape adhesive - Open cell foam	1 kit	Used in constructing LC Positioner grout dam
	Dowel	2290937-2	Wood Dowel; 16 mm diameter	12 pc	
	Cable Conduit	2285057	Cable conduit - sheet metal part	1 pc	
	Vinyl Trim	2296890	Gripping Range; 1.5 to 3 mm THK	1 m	
	Vinyl Trim	2296891	Vinyl trim with segmented metal core 12 mm	1 m	

2.3.3.4 2285052 – Above grade, Floor anchor with insert

Table 5-11:

Item	Name	Part #	Description	Quan.	Notes
	Floor Anchor	46-302265P1	Floor Anchor Bolt; 5/8-10 x 6 in. drilling 12 anchors for LC Positioner and 4 anchors for Table	16 pc	Above Grade anchor mounting method hardware
	Grout assy	2285055	- 10 kg Powdered Mortar Ardex K-15 - RTV Silicon Rubber Adhesive - 18 mm making tape adhesive - Open cell foam	1 kit	Used in constructing LC Positioner grout dam
	Dowel	2290937-2	Wood Dowel; 16 mm diameter	12 pc	
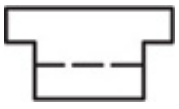	Water Electric Separator	2268647	Manufactured part introduced in Positioner key hole to fit 1 electrical conduit of 6”.	1 pc	Electrical and water conduits separated inch size.

2.3.3.5 2285053 – Through bolts with insert

Table 5-12:

Item	Name	Part #	Description	Quan.	Notes
	Bolt, Hex	2296892	Through Bolt; M20 - 500-400 12 bolts for LC Positioner and 4 bolts for Table	16 pc	Through Bolt mounting method hardware
	Washer, Flat	99142204	Special Flat Washer for Through Bolts; one for each bolt	16 pc	same as above
	Plate	2290941	Special Steel Spacer Plate; 4 in. x 4 in. (102 mm x 102 mm); one for each bolt	16 pc	same as above
	Nut, Hex	99141607	Hex Nut M20 STL galvanized two for each bolt	32 pc	same as above
	Grout assy	2285055	- 10 kg Powdered Mortar Ardex K-15 - RTV Silicon Rubber Adhesive - 18 mm making tape adhesive - Open cell foam	1 kit	Used in constructing LC Positioner grout dam
	Dowel	2290937	Wood Dowel; 24 mm diameter	12 pc	
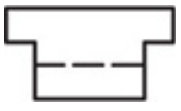	Water Electric Separator	2268647	Manufactured part introduced in Positioner key hole to fit 1 electrical conduit of 6”.	1 pc	Electrical and water conduits separated inch size.

2.3.3.6 2285632 – Floor plate / Base plate assembly

Table 5-13:

Item	Name	Part #	Description	Quan.	Notes
	Hex Screws	2360523	Screw M16x30x30 Inox A4-80 Pass	12 pc	For floor plate / Base plate assembly
	Washer	99125091	Washer P 17 mm/40 mm	34 pc	24 are used for the positioner integration
	Hex Screws	99133570	Screw M16x40x40 Inox A4-80 Pass	10 pc	4 only are used for Omega

NOTE: The kit 2285632 Floor plate / Baseplate assembly is needed when the floor plate is installed. This part isn't GE part. It's ordered locally.

2.3.4 2285054 – Templates

2.3.4.1 2285056 - A/C/N Templates

Table 5-14:

Item	Name	Part #	Description	Quan.	Notes
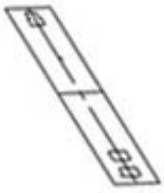	A/C/N Templates	2185979	LC Positioner and Omega C/N Patient Table floor mounting template	1 pc	See Illustration 5-33
		2127792	LCV+ Gantry and Omega A Patient Table floor mounting template	1 pc	
		2360133	Innova 4100 Template	1 pc	Specific for Innova 4100

2.3.4.2 2186109 – EP Template

Table 5-15:

Item	Name	Part #	Description	Quan.	Notes
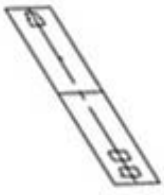	EP Template	2186109	LCV+ Gantry and EP Patient Table floor mounting template	1 pc	

2.4 Injector Mounting Requirements

CAUTION

Table accessory rail load consideration:

The maximum load per table accessory rail is 40 kg (88 lbs) at 150 mm (0.49 ft) (60 N.m or 44.25 ft/lbs). Therefore:

- **Only light extra load not exceeding 5 kg (11 lbs) at 100 mm (0.33 ft) (i.e IV pole with its accessories, pressure head...) is authorized on the same table accessory rail as the injector.**
- **Never install injector and radiation protection on the same table accessory rail.**

- **Typical installation on the front table accessory rail is Smart handle or Smart box, Table Side System Control (TSSC), InnovaCentral/Touchscreen, Table panning device and cables support.**
- **If needed an optional rail can be installed at table foot end of the Omega V table for other options.**

This page left intentionally blank.

Chapter 6 Electrical Connections

1 Power Distribution

Illustration 6-1: AC Interconnect without Fluoro UPS

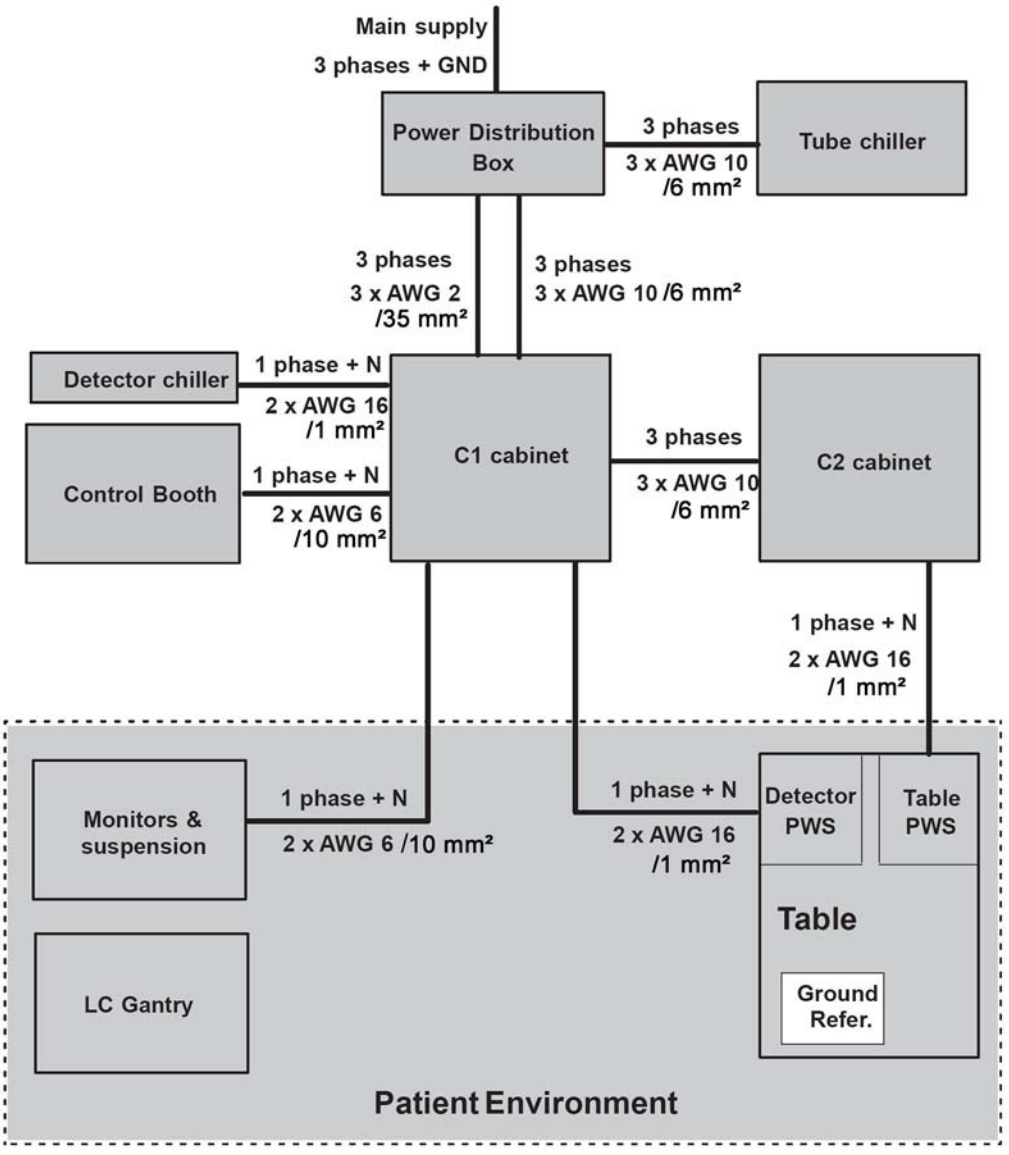

NOTE: All short AC power cable less than 3 meters, between peripherals and respective power strip, are not shown. All have a single phase line, a neutral line and a ground wire.

Illustration 6-2: AC Interconnect with Fluoro UPS

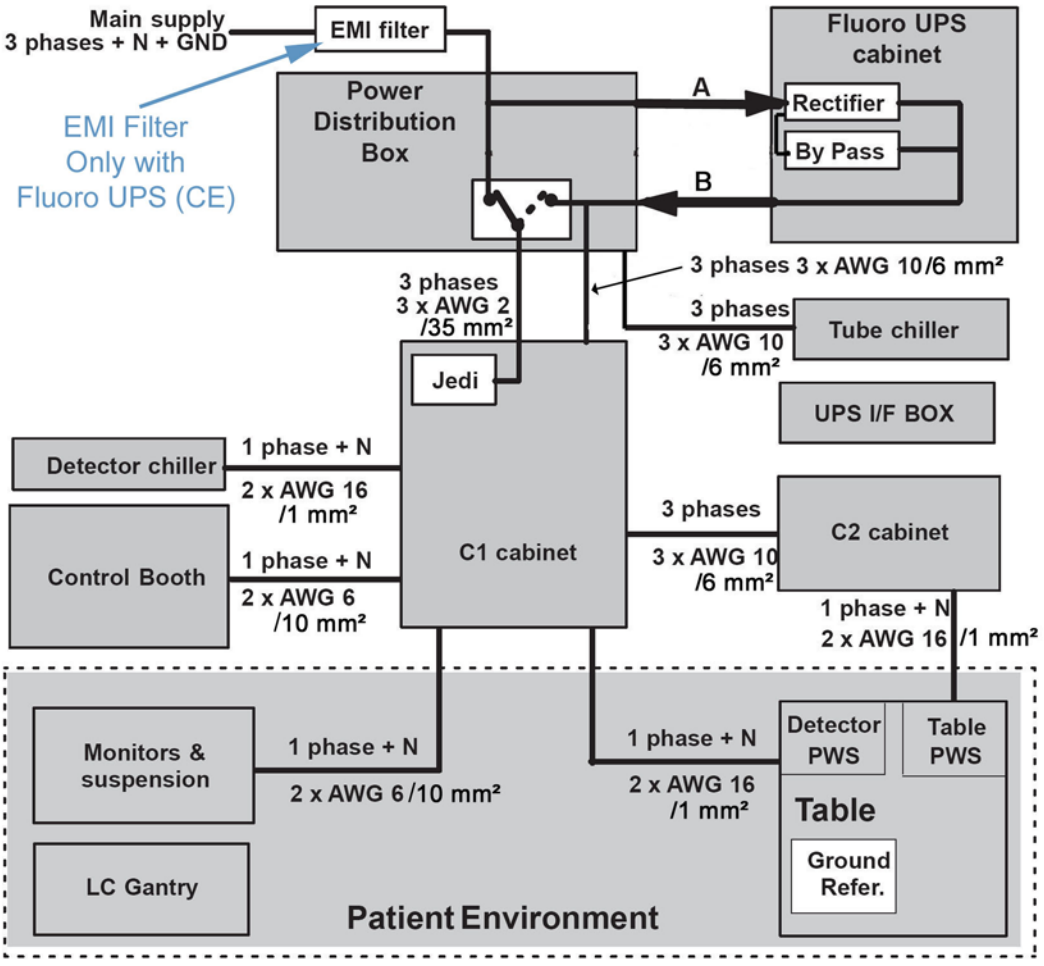

NOTE: Contractor responsibility:

1. Electrical contractor is responsible for providing and connecting cables from the PDB to the UPS (see table below) and configuring the PDB in bypass mode.
2. GEHC is responsible for powering on the system with the UPS in bypass mode.
3. GEDE is responsible for UPS commissioning.

Table 6-1: A and B cables specification

Cable	UPS CE version		UPS UL version		
	Recommended (Note (1))		Max	Recommended (Note (2))	
A	5 X 10 mm2	3 ph + N + PE	5 X 3 AWG	5 X 6 AWG	3 ph + N + PE
B	5 X 10 mm2	3 ph + N + PE	5 X 3 AWG	5 X 8 AWG	3 ph + N + PE
Note: (1) According to local requirement. Note: (2) According to local requirement and cable type.					

NOTE: The PDB shall include the switch allowing the commutation of generator supply to the UPS. Neutral shall be fed by the hospital. The customer provides the cables A and B.

NOTE: Refer to the UPS vendor Service manual Installation Guide SG Serie 10, 20, 30 & 40 kVA for more details

2 Recommended Power Distribution System

WARNING

ANY SAFETY LABELS AFFIXED ON THE PDB AND ON THE EMI FILTER ENCLOSURE WOULD HAVE TO FULFILL THE LEGAL REQUIREMENT OF THE COUNTRY CONCERNING THE LANGUAGE TO BE USED FOR INFORMATION FOR SAFETY ON PROFESSIONAL EQUIPMENT.

CAUTION

To prevent risk of cable overheating or fire.
Local regulations concerning cable tightening inside the PDB must be respected.

NOTICE

The drawing hereafter is a guide to illustrate all functions included inside the main disconnect room device.

It should be compliant with the specific country rules.

NOTE: According to the country, the PDB/MDP can be ordered from GEHC.

One configuration 480 V, 60 Hz is certified to UL 508 and CSA C22.2 N°14: North America. Second configuration (380/400/415 V, 50/60 Hz) is certified to EN 60439-1 and is CE marked (not certified for Japan and China). Please check your country local regulations for the applicable configuration or refer to your local GE representative.

2.1 Main functions

Lock–out/Tag–out by S1 (Europe) or CB1 handle (US),

Main disconnect device by DMD1 (Europe) or CB1 handle (US),

Low voltage created by TR1 applied on remote, L1 and L2,

Separated injection circuit by TR2/CPT2 and BR,

L is mandatory for French standards,

Protect the Room Emergency Off (AU1, AU2) from accidental activation

WARNING

MANDATORY FOR FLUORO UPS OPTION THE PDB FRONT PANEL MUST WARN THE OPERATOR WITH AN ELECTRICAL HAZARD LABEL.

NOTICE

L1 is mandatory in several countries. By the same L1 circuit one or many other(s) light indicator(s) have to be mounted inside the examination room and have to be visible from anywhere by operators.

NOTICE

It is recommended to separate the two power supply cables from the other cables.

2.2 Typical PDB (Europe CE)

Typical PDB (Europe CE) - model number XR_765_4

Illustration 6-3: CE PDB 1/2

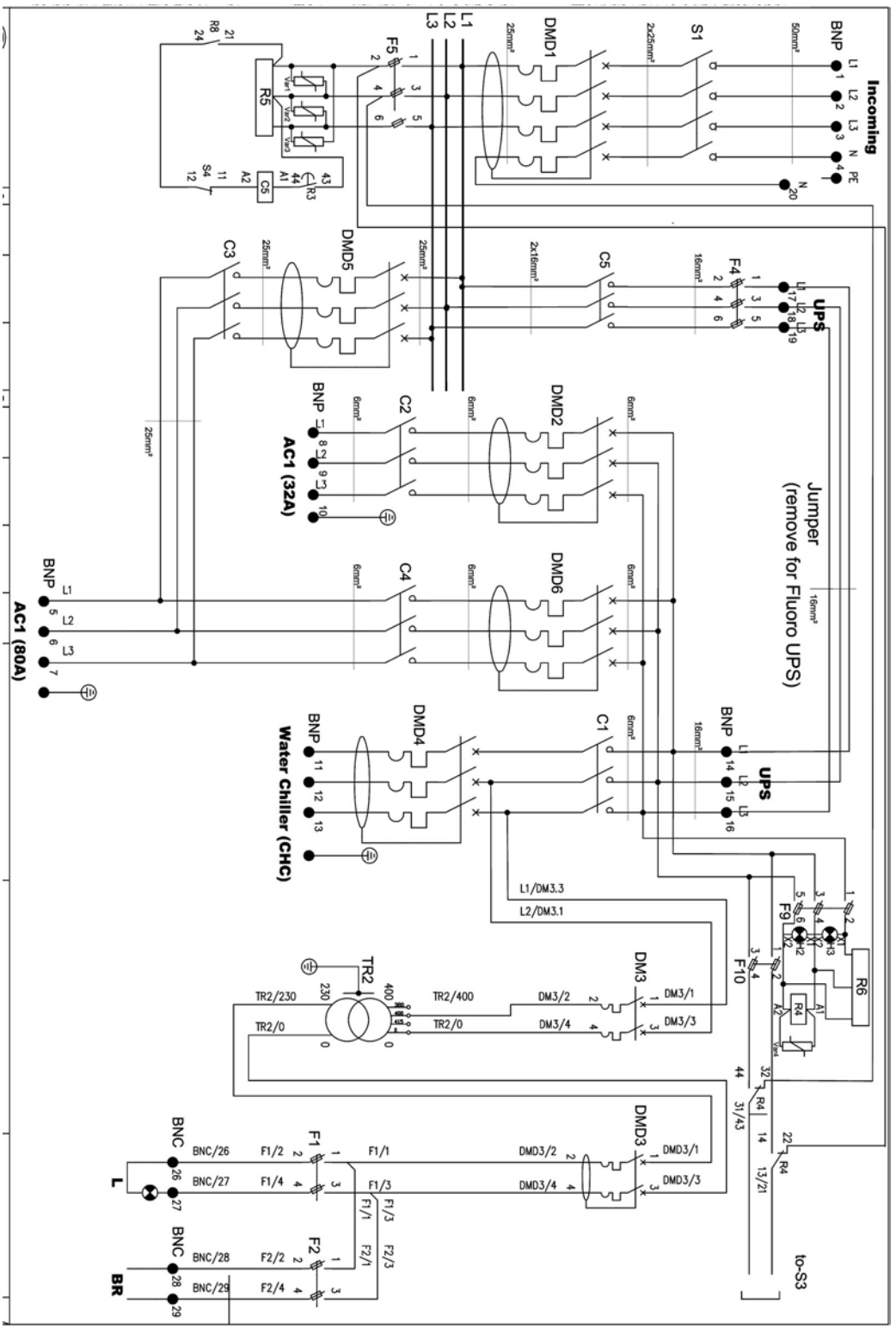

Illustration 6-4: CE PDB 2/2

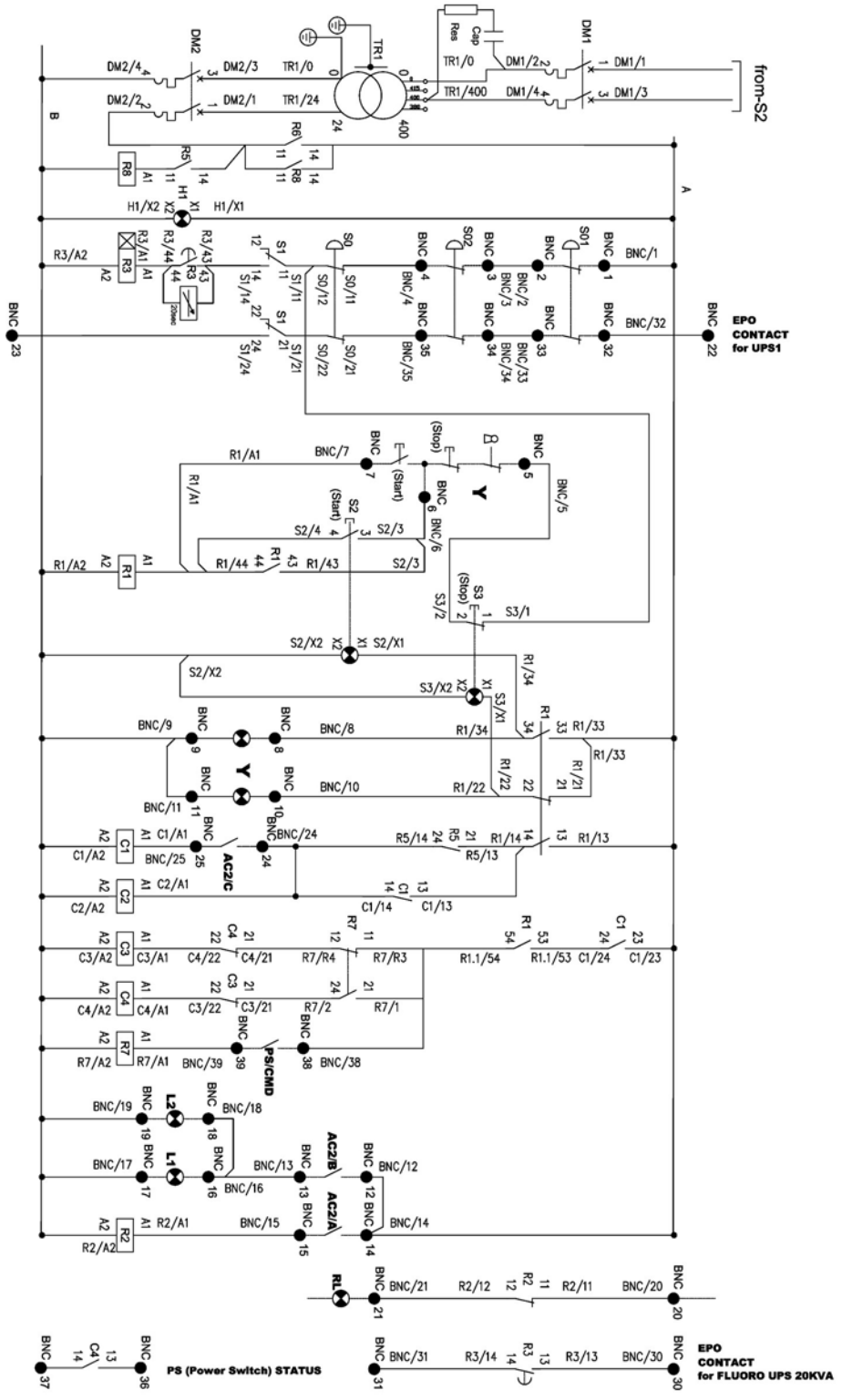

Illustration 6-5: System Power (Block Diagram)

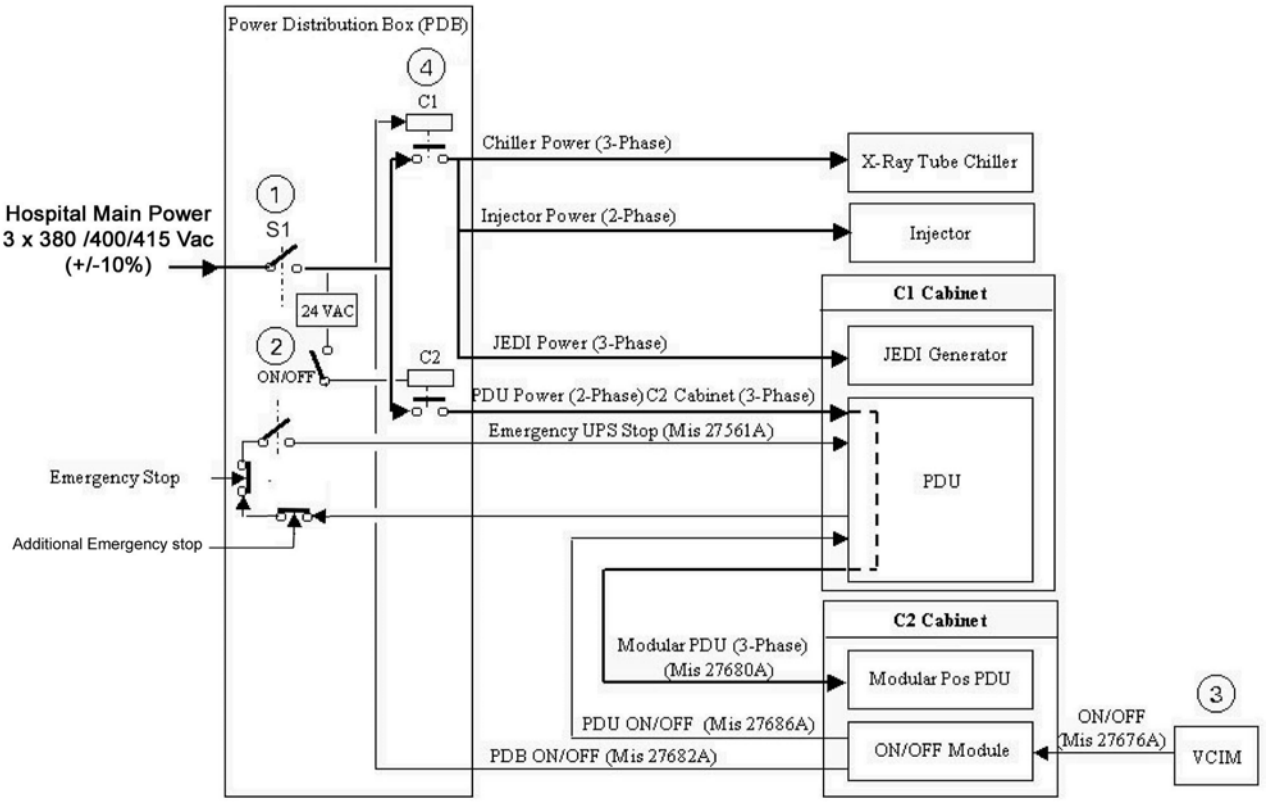

Illustration 6-6: Detail Of General Power Supply – C1 Power Terminal Connection

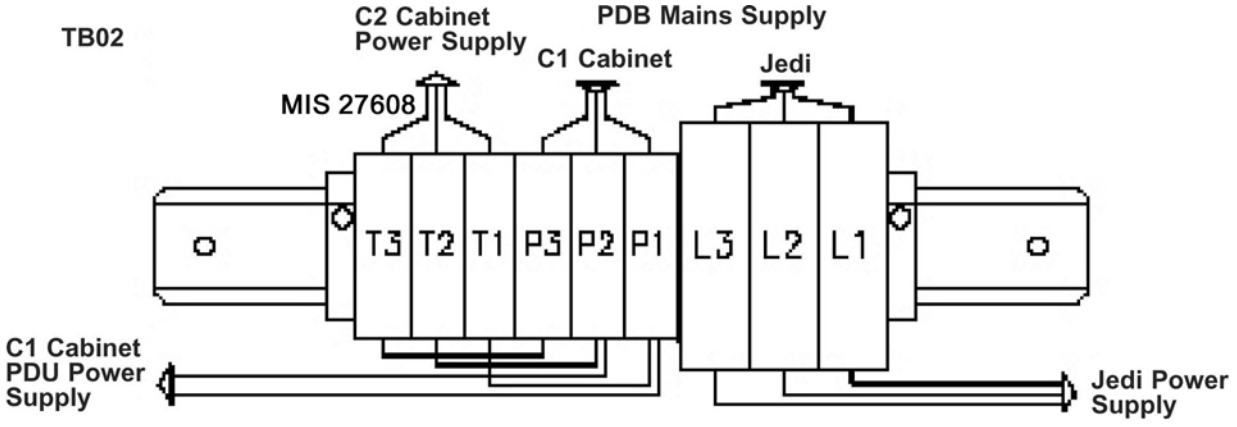

CE CONFIGURATION

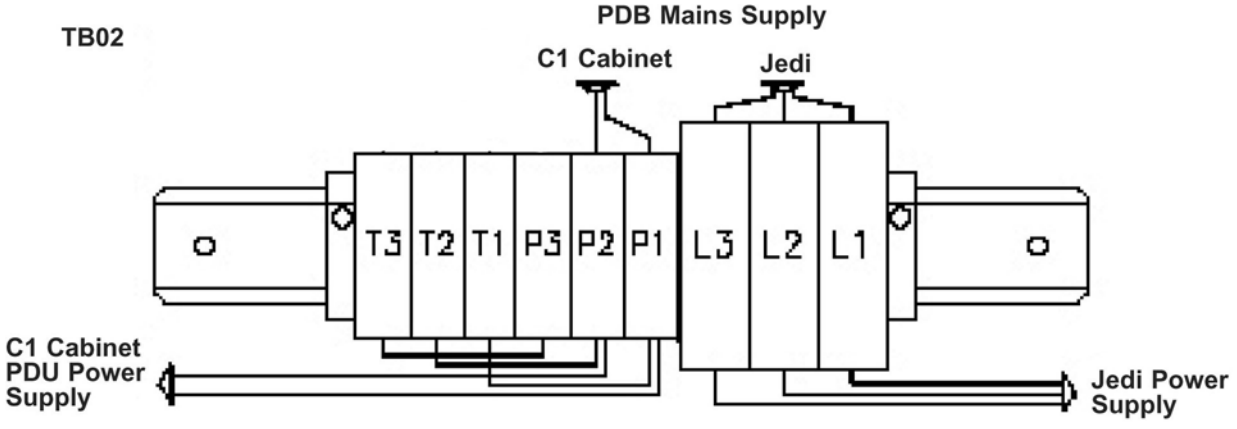

UL CONFIGURATION

2.3 Typical US PDB

Illustration 6-7: PDB UL layout (1/2)

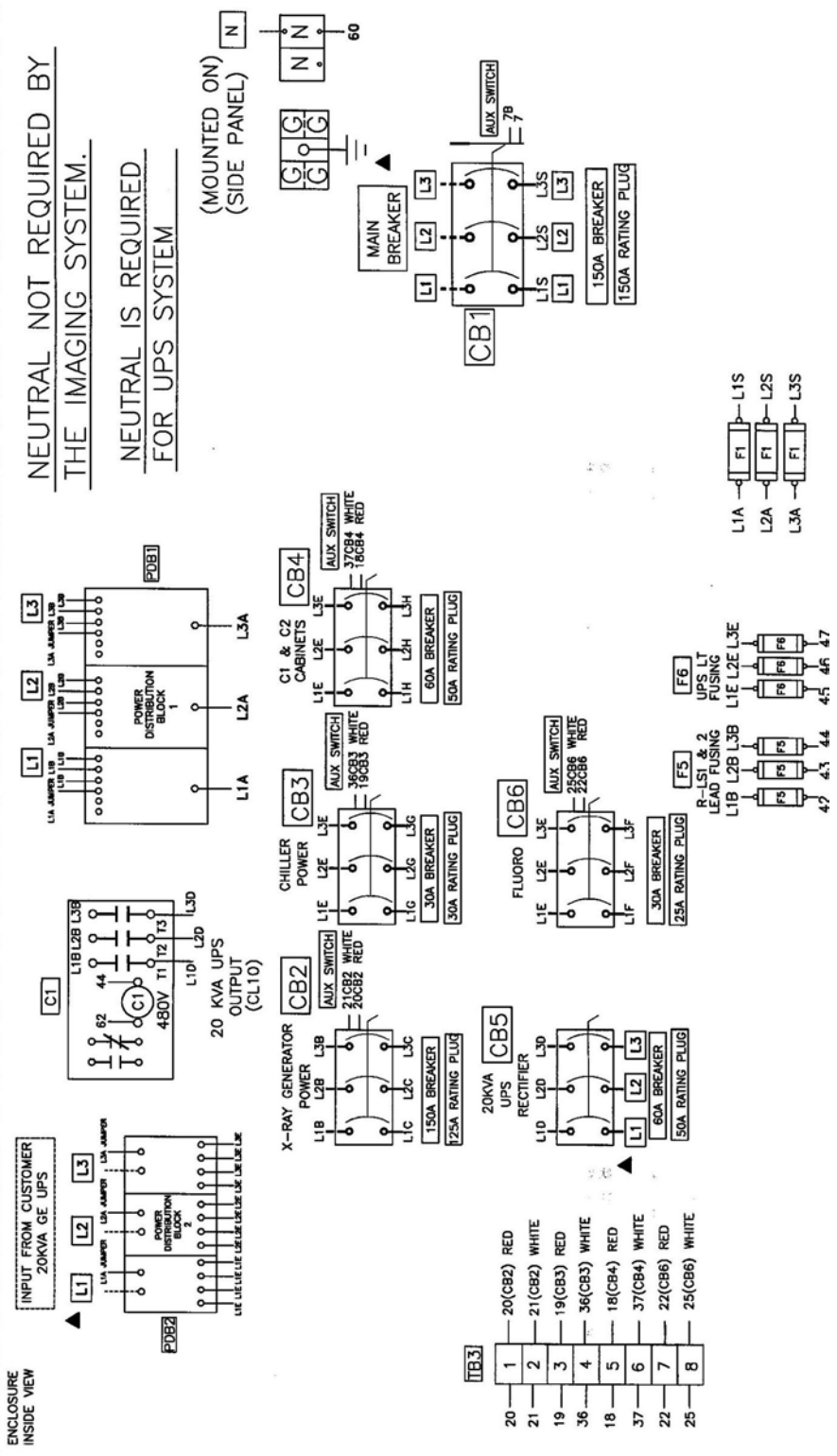

Illustration 6-8: PDB UL layout (2/2)

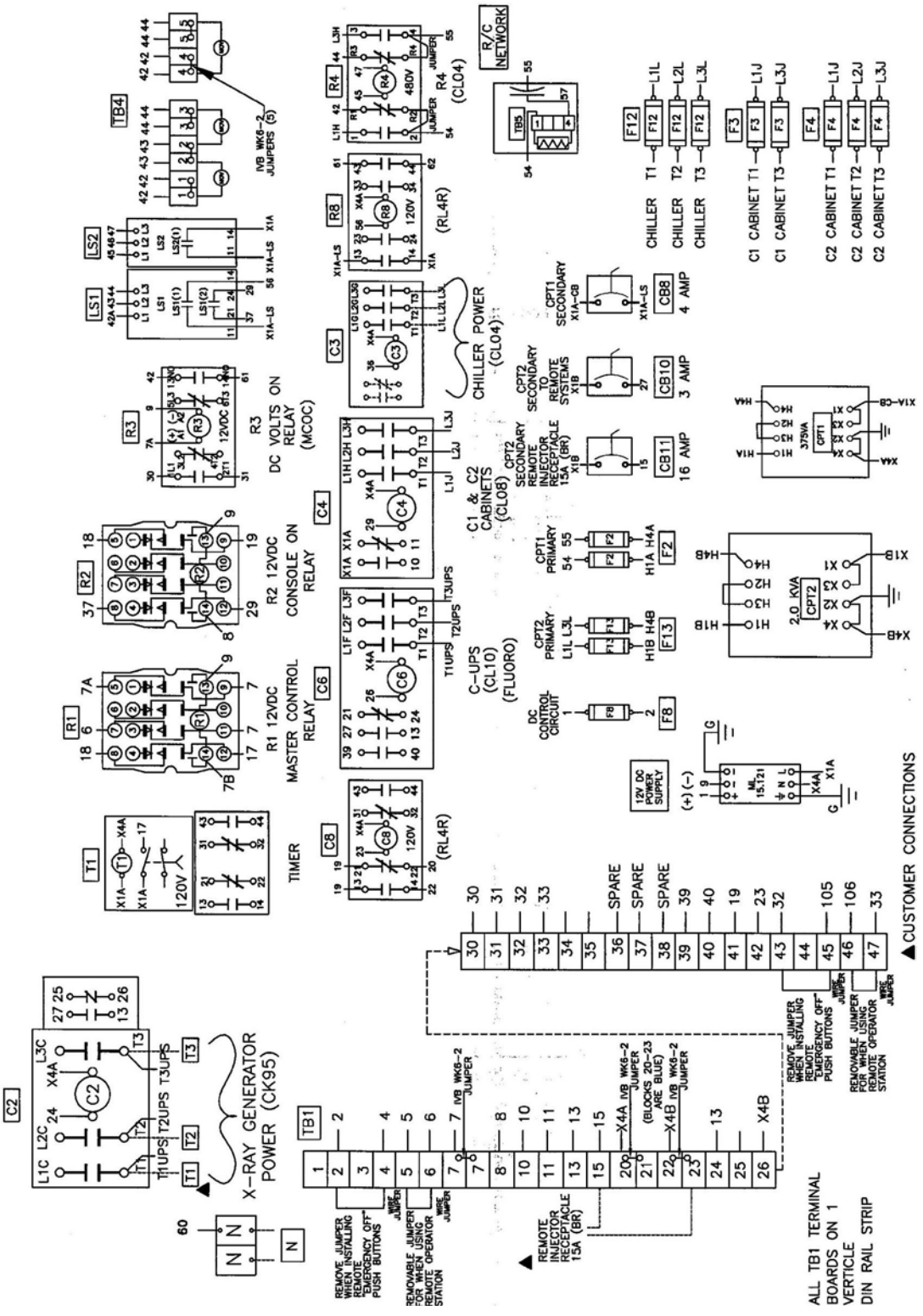

Illustration 6-9: PDB UL Electrical Schematic (1/2)

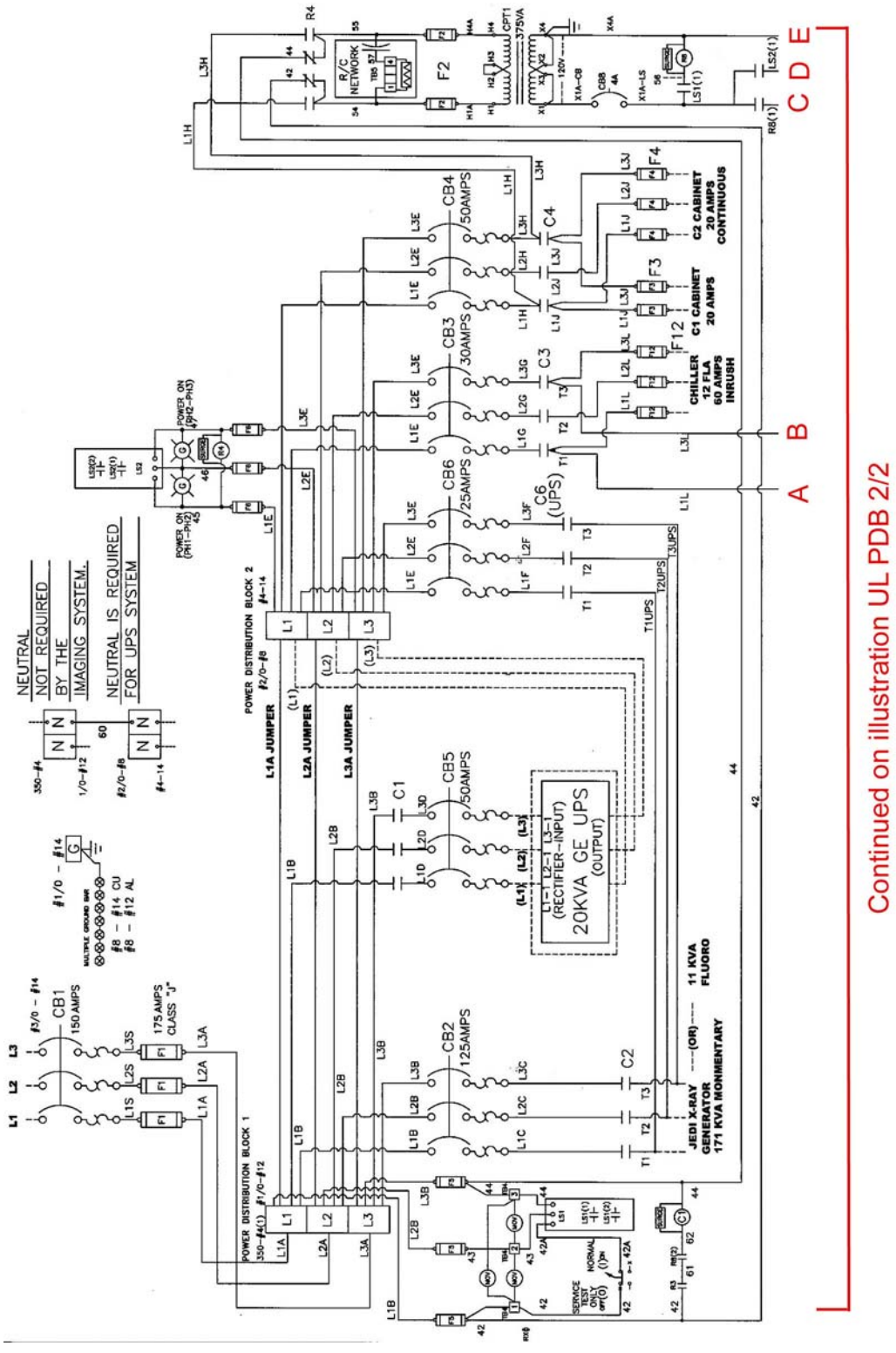

Illustration 6-10: PDB UL Electrical Schematic (2/2)

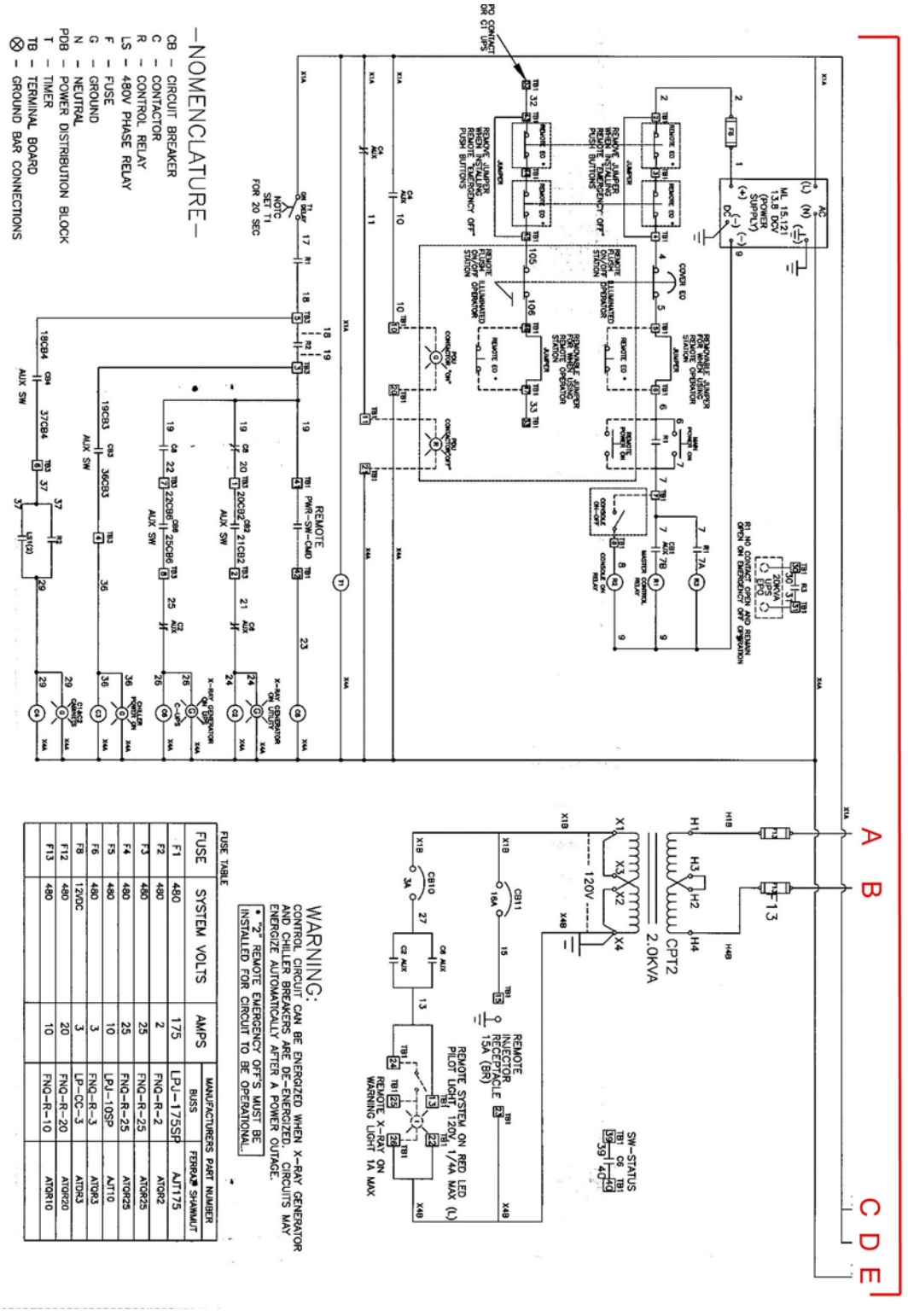

2.4 Typical EMI Filter Box (CE configuration only)

The EMI filter box shall be installed on the sites with fluoro UPS CE.

The EMI Filter Box will be delivered as a single product (not part of Fluoro UPS or PDB) by GE Consumer & Industrial.

Illustration 6-11:

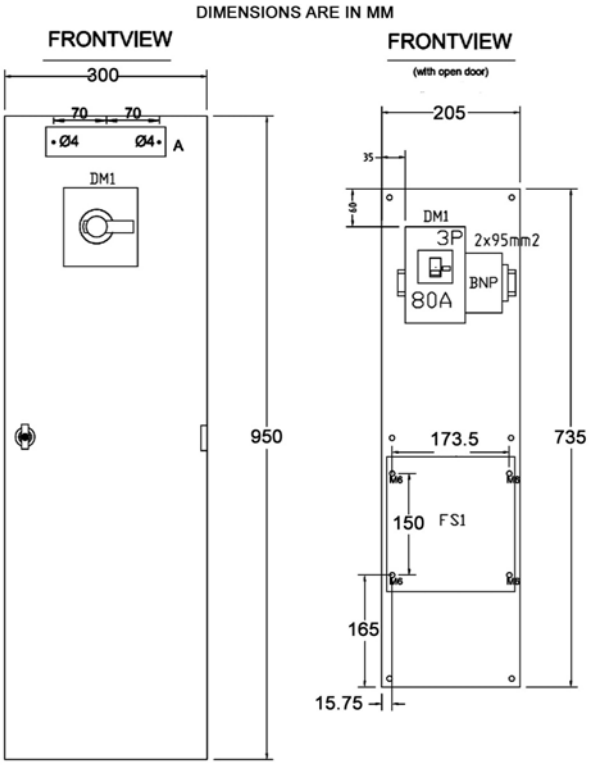

Table 6-2: EMI Filter Box Dimensions

External dimensions	950 mm x 300 mm
Internal dimensions	735 mm x 205 mm

3 Grounding

A vascular lab is a critical care area and requires a special grounding system for patient safety. An equipotential grounding system is recommended for meeting patient safety requirements.

Reference: For general system grounding requirements and information on establishing an equipotential grounding system, refer to: *Grounding Continuity* – Job card in the Installation manual.

NOTICE

All shielded cables shall have a connection to ground at each extremity without regard to the grounding to the scheme below.

NOTICE

Metallic covers on cable connectors shall be tested to ground.

Illustration 6-12: Grounding Interconnect Without Fluoro UPS

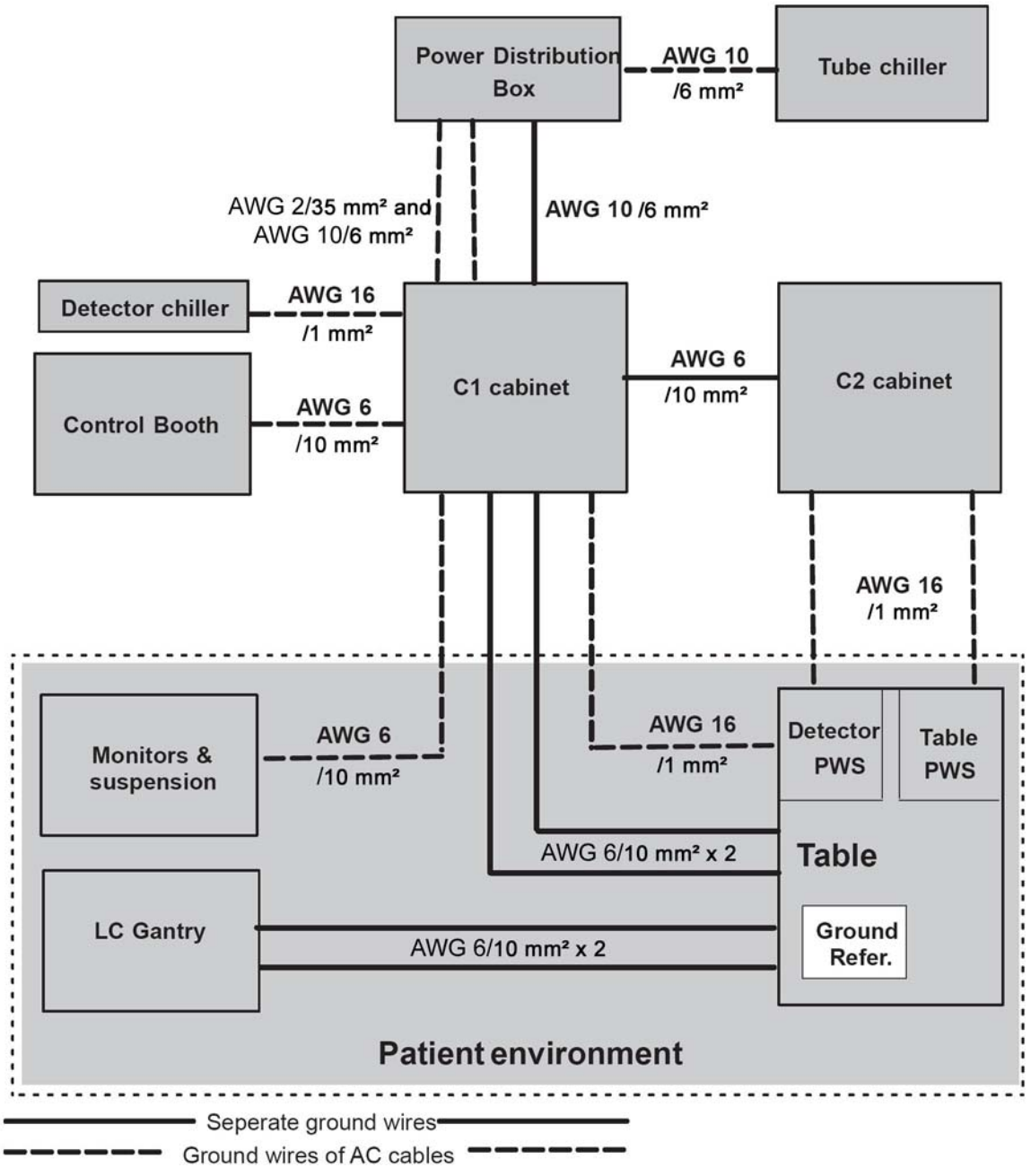

Illustration 6-13: Grounding Interconnect With Fluoro UPS

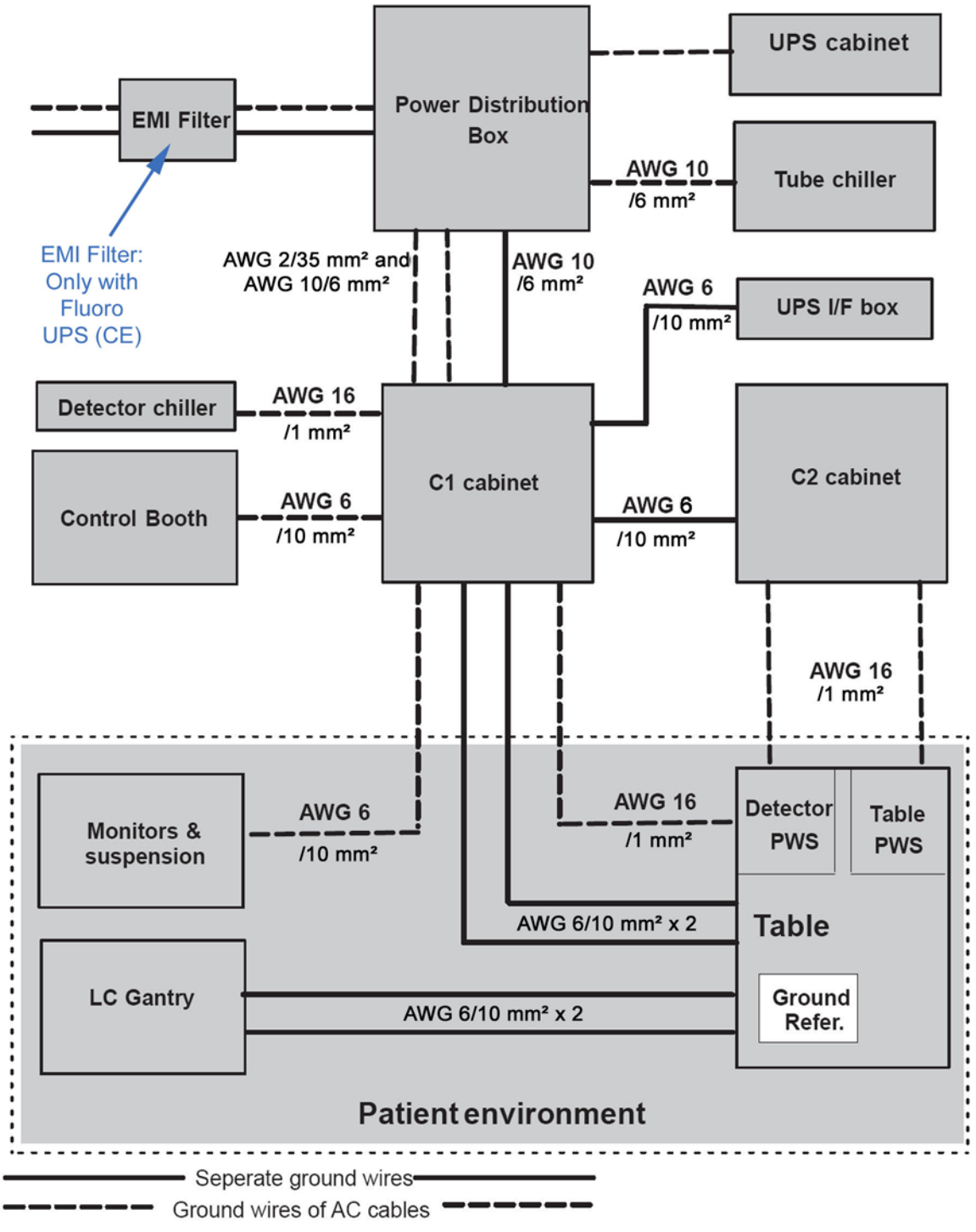

4 Power and Grounding Requirements

4.1 Requirements for ground cables provided by the customer

- A wall circuit breaker or equivalent device with LOTO capability must be installed on the Main Power. This device must be compatible with the power input specifications of the system. Procurement, delivery and installation of this breaker is customer responsibility.
- The customer shall provide the ground wire between the EMI filter (for Fluoro UPS CE option only), PDB (Power Distribution Box) and earth. Impedance of the ground wire to earth shall be lower than 2 ohms (refer to direction 46–019668 for method of measurement).
- The ground wire to earth shall be a minimum of AWG 2/0 (UL) or 35 mm^2 (CE) or the same size (100%) as feeder wires, which ever is larger.
- The shield of any shielded cable coming from the distribution cannot replace the ground wire.

4.2 Requirements for power supply cables provided by the customer

The customer shall provide the power supply cables between the main transformer and the system:

- between the transformer and the PDB (Power Distribution Box),
- between the transformer and the EMI filter (for Fluro UPS CE option only),
- between the EMI filter and the PDB (Power Distribution Box) (for Fluro UPS option only) (max length = 3 m),
- between the PDB and the Jedi (max length = 24 m),
- between the PDB and the C1 cabinet (max length = 24 m),
- between the PDB and the tube chiller (max length = 24 m),
- between the PDB and the Fluoro UPS (Fluoro UPS option).(max length = 24 m),
- between C1 and C2 cabinets (max length = 6 m)

The power supply cable between the main transformer and the PDB (Power Distribution Box) and between the PDB and the Jedi shall be sized to insure proper voltage drop.

Table 6-3:

Max Line Impedance for feeder line between Generator cabinet and Hospital						
V	380	400	420	440	460	480
	0.09	0.096	0.102	0.108	0.114	0.12

The power supply cables provided by the customer shall be sized according to the Illustrations *AC Interconnect without Fluoro UPS* and *AC Interconnect with Fluoro UPS* in Section 1, Power Distribution.

4.3 Requirements for all power supply and ground cables provided by the customer

- Power supply and ground cables shall be dedicated to the system. They must not be used to supply other systems.
- Power supply and ground cables shall be kept separated from room system cables.
- Power supply and ground cables must be connected to the same distribution panel. They must run near one to the other.
- Power supply and ground cables provided by the customer shall be compliant with local regulations (UL, CSA, IEC, CCC).
- Power supply and ground cables must be CCC certified and labeled for installation in China.

Reference: For specific Vascular system grounding maps and connection details, refer to the MisMap and mis chart listed in Section 14, MIS (Master Interconnect System).

5 IVUS Option

5.1 Wiring Diagram

The connection cables between the IVUS Control Room and Procedures Room components run in a dedicated under floor conduit (see Section 5.2).

A GND wire between the C1 cabinet and the IVUS CPU runs in the underfloor conduit prepared for the Control Booth cables between Equipment Room and Control Room.

Illustration 6-14:

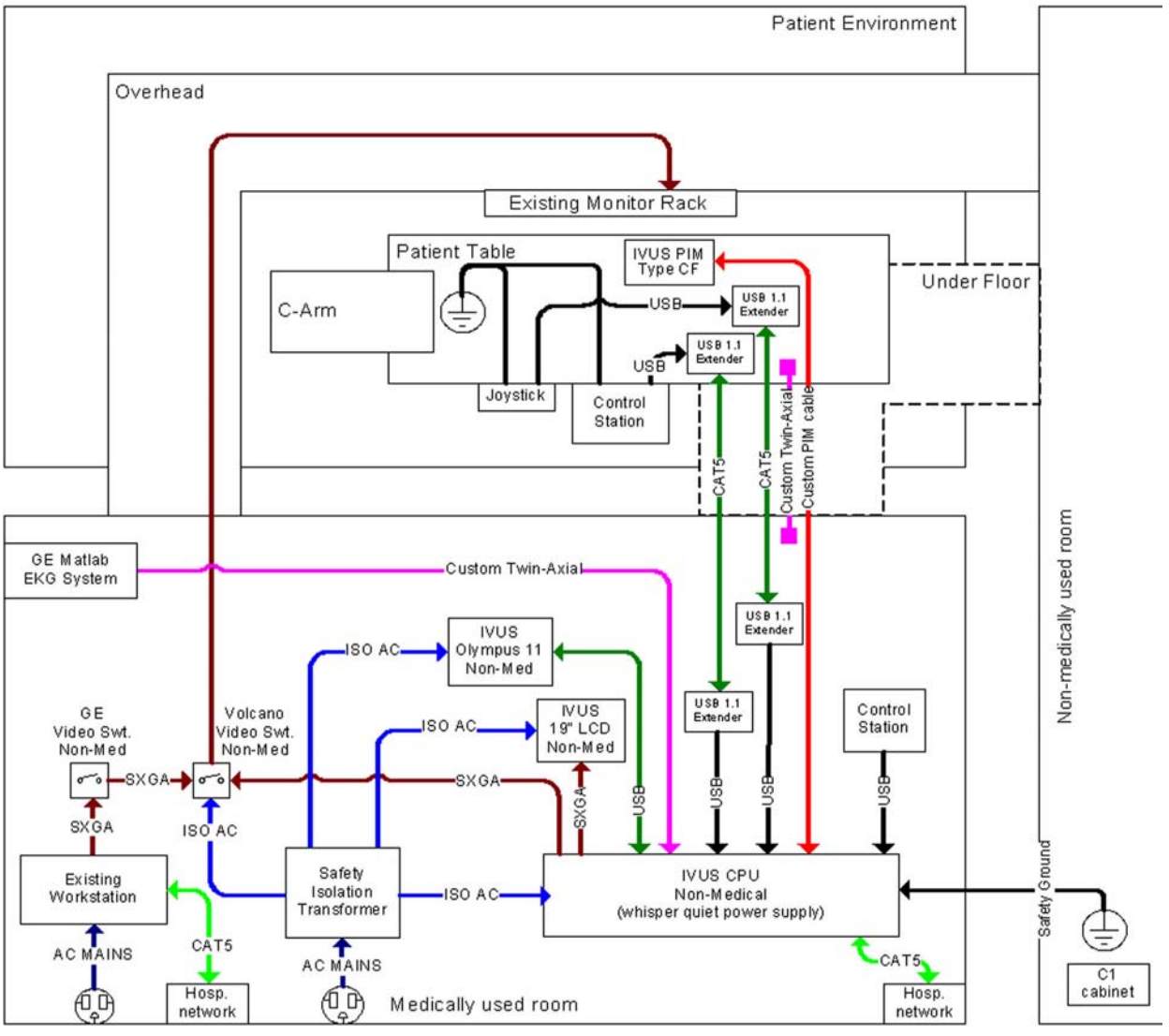

5.2 IVUS Floor Conduits

A 3 inches and max. 25 m long conduit between Control and Patient Rooms shall be prepared below the floor for the IVUS Innova interconnection cables.

- Locate the position of the IVUS components in the Control Room, according to the workflow requirement of the operators.
- Establish a 76 mm (3”) conduit below floor from the IVUS CPU location in the Control Room, to the foot end area of the Patient Table in the Procedures Room:
  - Locate the Procedures Room exit of the conduit close to the centerline of the Patient Table
  - Locate it as close to the Patient Table base as possible, considering :
    - Room for access to the table for service purposes
    - Limitation from other cables connected to the table
    - Location of the table plate
    - Location of Mac-Lab conduit
    - Location of Physio or Med Gases connections
    - The IVUS cables are moving cables, they have to allow the Patient Table motions (Panning, Lifting and Rotating)
- Use similar solutions (i.e. protection against cleaning fluids, etc.) as it is used for the Mac-Lab conduit
- See also guidance on Typical Layout drawing 4-58f sheets E1 and S2, showing Mac-Lab and P/M Gas location recommendations.

5.3 Run Interconnection cables through the Conduit

Use the IVUS PIM (#806365003) as reference to the procedures below.

- Unpack , and check the completeness of the Preinstallation kit :
  - 1pcs - Custom PIM cable 30 m (98 ft, 5 in) - Volcano ID :806452001
  - 2pcs - CAT5 cable 30 m (98 ft, 5 in) - Volcano ID :803391001
  - 1pcs - Custom Twin axial cable - Volcano ID :806380001
  - 1pcs – Ground Cable, 30 m (98 ft, 5 in) s5i – Volcano ID :806889001
  - 1pcs - IVUS preinstallation Manual - Volcano ID :806365003
- Install 806889001 Ground Cable through the Control Booth conduit (see note)
- Install the cables through the IVUS conduit from the Control Room end :
  - 806452001 Room - PIM cable, round shaped connector end to the Procedures
  - 803391001 - Ethernet cable (1pcs)
- Install the optional cables through the IVUS conduit from the Control Room end :
  - 803391001 - Ethernet cable if 2 IVUS remote control items will be installed 1 IVUS Control Station and 1 IVUS Joystick)
  - 806380001 - ECG cable in case, if NON Mac-Lab ECG will be installed

NOTE: For the ground cable, see the IVUS service manual for special instructions concerning cable running and cutting .

NOTE: If the installation has the **MaC-Lab ECG** in the configuration, the ECG cable shall not be run through the conduit, it will be used in the Control Room **to connect Mac-Lab and IVUS PCs**.

NOTE: You should consider running the ECG cable through the conduit in case, the customer requires interconnecting to a **NON Mac-Lab ECG** at the table base.

In this case you **shall hide the unconnected cable in the conduit** for future expansion options.

NOTE: Same applies to the 2nd Ethernet cable, if a later extension of the IVUS remote controls expected.

- **Ensure sufficient cable length on the Procedures Room end of the cables according to the table below**

Cable	Free length from the conduit exit
PIM cable	2.4 m (8 ')
Control Station cable	2.1 m (7 ')
Joystick cable	2.7 m (9 ')
ECG cable	Depends on the ECG location

NOTE: The incorrect cable length might cause reliability issues during the operation !

Make sure, that the out of conduit parts of the cables with the connectors are properly protected during the rest of the installation

5.4 Electrical Requirements

The power for the IVUS hardware components delivered with the product (PC, monitor, Video Switch and printer) is supplied through the IVUS Safety Isolation Transformer .

The customer is in charge to provide a wall outlet to supply the Safety Isolation Transformer. This outlet shall be located in the control room suitable to the IVUS components positioning. The maximum rated power of the Safety Isolation Transformer is 600 VA, the maximum continuous system power consumption for s5i and s5iGE IVUS systems is 400 VA.

The s5i and s5iGE IVUS systems can be configured to work on 100, 120, or 230 VAC. The difference between the supported configurations is limited switching the fuse values. See table below :

Line Voltage	Fuse value
100 VAC	8 A
120 VAC	6.3 A
230 VAC	3.15 A

Frequency: 50/60 Hertz

The country specific power cords are pre-selectable in the GTC.

NOTICE

The IVUS will be connected to a standard hospital outlet. There is no grounding requirement specified at site preparation.

5.5 Ethernet Network Requirement

The IVUS CPU located in the control room shall be connected to the hospital Ethernet network. A wall Ethernet outlet shall be available in the control room to connect the device.

DICOM Image Storage:

Saving patient cases to DVD: The archived images are stored in DICOM format with Volcano s5i system acting as a File Set Creator (FSC), following the guidelines in the 2004 DICOM 3.0 specification.

Sending patient cases to DICOM server: The Volcano s5i supports the ultrasound multi-frame image storage SOP class as an SCU (service class user).

For more information, see the Volcano s5 DICOM Conformance Statement located on line at :

http://www.volcanocorp.com/pages/products/s5/productinfo/s5_DCS.pdf

6 X-Ray Lamp Room Distribution

The fitter shall install a lamp in:

- Exam room,
- Control room.

So that they are connected to the equipment through connexion terminals.

Innova LC provides a room distribution from C2 cabinet as follows:

- X–ray–on–line (red) drive by low voltage relay 24 V. Acting during X–Ray exposures in Control Room.
- X–ray–on–line (red) drive by low voltage relay 24 V.
  In the Exam Room, visible from any place in the room.
  Acting during X–ray exposures.
- room light (limited to 24 Vac maxi, wires sized to 10 Amps maxi), controls an external relay which applies power to the room lamp.

CAUTION

THE X-RAY ON LAMP MUST BE INSTALLED IN THE EXAM ROOM TO CONFORM TO INTERVENTIONAL STANDARD IEC/EN 60601-2-43.
SIGNAL INDICATING THE X-RAY ON SHALL BE PERCEPTIBLE BY THE OPERATOR IN ALL THE LOCATIONS DEFINED FOR THE PERSONNEL WHO MAY RECEIVE SCATTERED RADIATION

In the control room, an additional X-Ray on light must be installed if the console (VCIM) indicator cannot be perceived by all the persons in the control room.

7 Room Light Distribution

Innova 2100-IQ, 3100/3100-IQ and 4100/4100-IQ has the ability to control an external relay that applies power to the room light (dry contacts).

The relay is to be provided by the hospital or contractor.

The wire size to connect to the C2 cabinet is 1.5 mm^2 (AWG 14).

Relay rating is max 600 VAC

The room light distribution is wired between the C2 cabinet and the PDB.

8 Room Speaker

The remote speaker provides the operator in the exam room, the indication of record exposure sequence (same level information as provided by the control room control panel).

The speaker must be installed in the exam room out of the patient vicinity to give easy access to the FE for maintenance operations and to medical staff to adjust the tone signal level and to be able to see the power LED indicator.

Illustration 6-15:

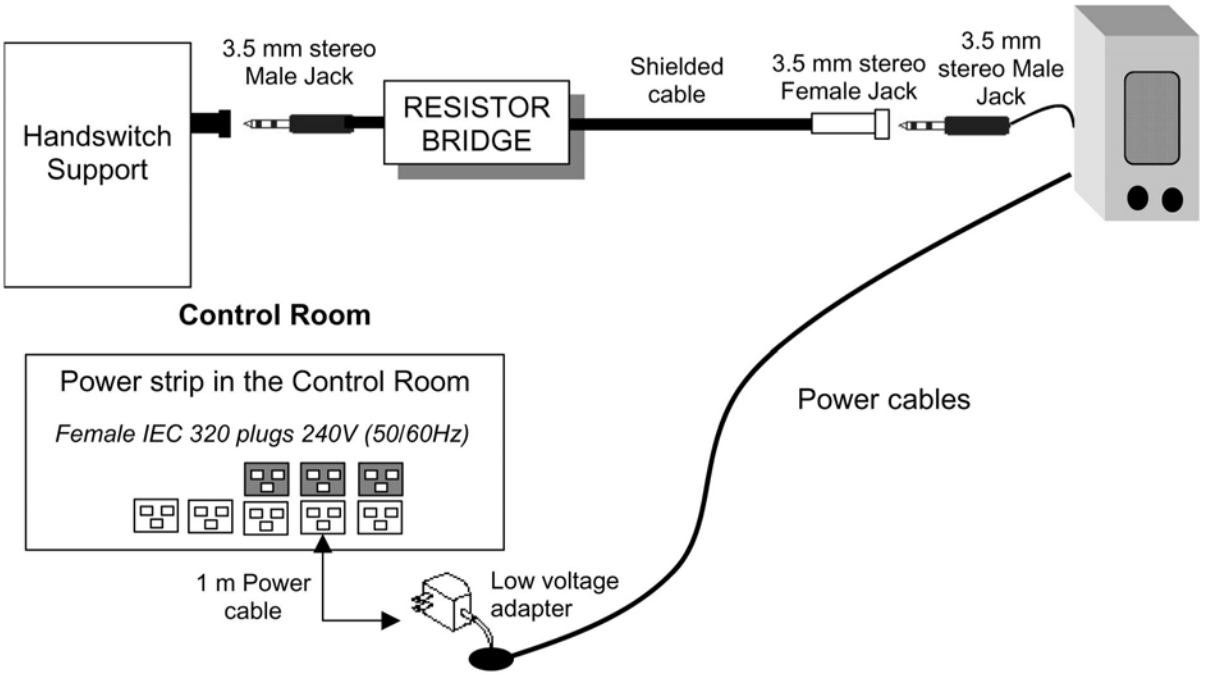

WARNING

THE REMOTE SPEAKER KIT SHALL NOT BE INSTALLED IN THE PATIENT VICINITY.

Patient Vicinity Definition : see *Patient Environment Equipment* in Chapter 4, Section 1, Room Layout Considerations

9 Door Interlocks

CAUTION

IEC 60601–2–43 requires not to install door interlocks. It is the responsibility of the field service to check that this requirement is not in contradiction with local regulation. In case of conflict, follow local regulation. No other measures employed for radiation protection should cause the interruption of irradiation and any other disturbance of a procedure in progress.

The door interlocks is wired to the C2 cabinet.

10 Emergency

10.1 Partial UPS Fluoro (option)

A Fluoro UPS (20 kVA) has been designed for the Innova system. This partial UPS lets the customer complete an exam in fluoro mode in case of a power failure. The autonomy provided by this UPS is 5 minutes of fluoro every 24 hours.

10.2 Full UPS Record (option)

An UPS sized for 150 kVA is required to supply the system in record mode. Such an UPS will provide to the customer about 10 minutes of autonomy. Contact your local GEMS representative for more information and/or public power distribution analysis.

NOTE: An UPS is inserted inside C1 Cabinet and the DL is not affected by microcuts with a duration of less than 10µs.

C1 UPS accepts a power cut without a hardware risk.

The UPS inserted inside C1 Cabinet is a part of the system and it is not permitted to replace it by another locally supplied unit.

UPS autonomy is 1 minute before shutdown. Time before shut down is 1 minute without risk of loosing stored image.

Time to completely charge the battery of UPS is 48 hours.

11 Injectors

The injector is provided with an additional ground cable (P/N #2135737) to meet equipotentiality requirement at patient vicinity.

11.1 Remote Injector (rack mount)

A power cord is supplied with the injector.

If the voltage is 110 VAC, the cord should be connected inside the bulkhead positioner cabinet, but it is highly recommended to connect it to a wall outlet fed by the main disconnect room device.

11.2 Pedestal Injector

A power cord is supplied with the injector.

In all cases (110 VAC or 230 VAC), it will be connected to a wall outlet near the operator location, fed by the main disconnect room device.

11.3 Injector L.F. ILLUMINA

As a result of power demand availability for all functions of this new injector, in any cases it will be connected to a wall outlet sized to 1500 W, 110 VAC or 230 VAC as nominal voltage. The wall outlet is fed by the main disconnect room device.

12 Advantage Windows

A power cord is supplied with Advantage Windows. It is connected to outlet fed by the main disconnect room device.

Verify that the ground between AW, AW spliter and monitors ground are equipotential (0.1 ohm equipotentiallity between room ground point (busbar) and wall outlets).

NOTICE

To power the AW splitter, use the appropiate cable out of lot P/N 2385173.

13 MAC-LAB System EX

The best location for a MAC–LAB Acquisition Unit Floor mount kit 408431–001 isn't defined yet.

For MAC–LAB System EX, refer to: Marquette document P/N 2000465–001 Preinstallation Guide.

14 MIS (Master Interconnect System)

Innova system interconnect cables are described in MIS (Master Interconnect System) documents. These documents specify all interconnections between components within the system.

Reference: For specific Vascular system interconnect maps and connection details, refer to the following

- *Innova 2100-IQ, 3100/3100-IQ, 4100/4100-IQ MIS Map*
- *Innova 2100-IQ, 3100/3100-IQ, 4100/4100-IQ MIS Charts*

General Guidelines

Innova System introduce a new system interconnect with a star distribution for all cables from the technical area. The cables are shipped on spools to create cable groups. Cable group 1 for Exam room and cable group 2 for control room. The cable group shall be put in place during the same action. The cables are routed in the same duct.

The HV cables could be pulled separately.

15 Cable Channeling

15.1 General

High voltage and power cables must be separated from other cables. Use a separate trough in the duct system, or use a separate conduit. Minimize cable length between the line disconnect and the System Cabinet power unit to reduce voltage regulation problems and wiring costs.

For information about the cables supplied with your system, please refer to Section 16, Physical Tuns.

15.2 Conduit

Separate conduits must be used for power and signal wires. These wires must be kept separated from each other.

Using conduit imposes some important considerations when used with this system. Of primary concern, the majority of cables used are pre–terminated. Pre–termination greatly simplifies interconnection but makes cable–pulling difficult because of the added dimensions of the connectors.

Conduit must be large enough to pass the cable and connector through with all other cables already in the conduit. Also, the size of conduit chosen must allow for future growth. There is the possibility of additional cables being added later as the system is developed and options are added.

The use of conduit is recommended for cables running overhead between rooms, especially when a diagonal run provides the shortest cable path

Separate conduits must be used for Hospital and Fluoro UPS power wires. These wires must be kept separated from each other (at least 30 cm).

15.3 Electrical Ducts

It's important that electrical ducts have separate compartments for power and signal wires. These wires must be kept separated from each other for proper system operation.

Electrical ducts have advantages, when used with a single room or two adjacent rooms. Electrical ducts combine cabling in a neat and functional appearance, with accessibility and room for expansion.

NOTE: Medrad AVANTA, IVUS and Mac-lab cables exit behind the table in the patient room.

It is the responsibility of the site planner to provide the appropriate solution to the table exit (e.g gas box, Clab II, Tram module, connection interface box)

NOTE: **MEDRAD Avanta Table mount:** A 76.2 mm (3 in) and max 25 m (984 in) length conduit between technical room and patient room shall be prepared below the floor for the three injector cables. It is recommended to use the MEDRAD Avanta floor mounting bracket to cover the duct hole in the patient room if there is no gases box.

Illustration 6-16: MEDRAD Avanta mounting bracket

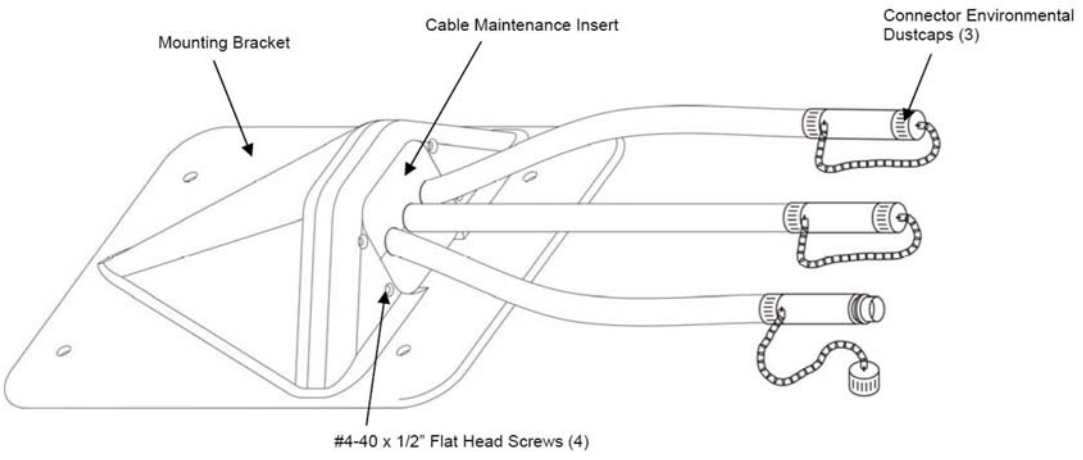

Floor mount installation can be accomplished one of two ways:

- Connectors mounted in trough under mounting bracket (Figure 1)
- Connectors mounted above mounting bracket (Figure 2)

Illustration 6-17: MEDRAD Avanta floor mounting methods

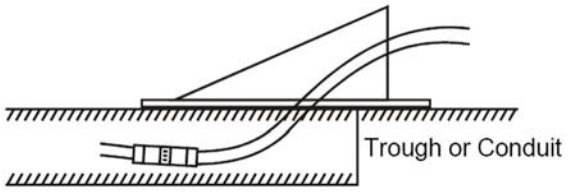

Figure 1

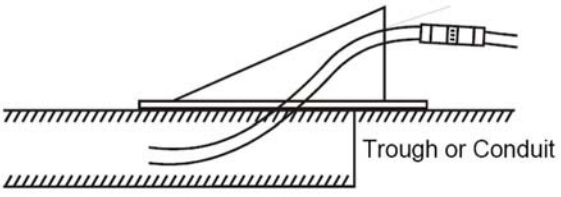

Figure 2

For further MEDRAD Avanta floor mounting, see the Installation guide MEDRAD Avanta Floor Mounting Bracket.

Illustration 6-18: Cable Channeling Layout

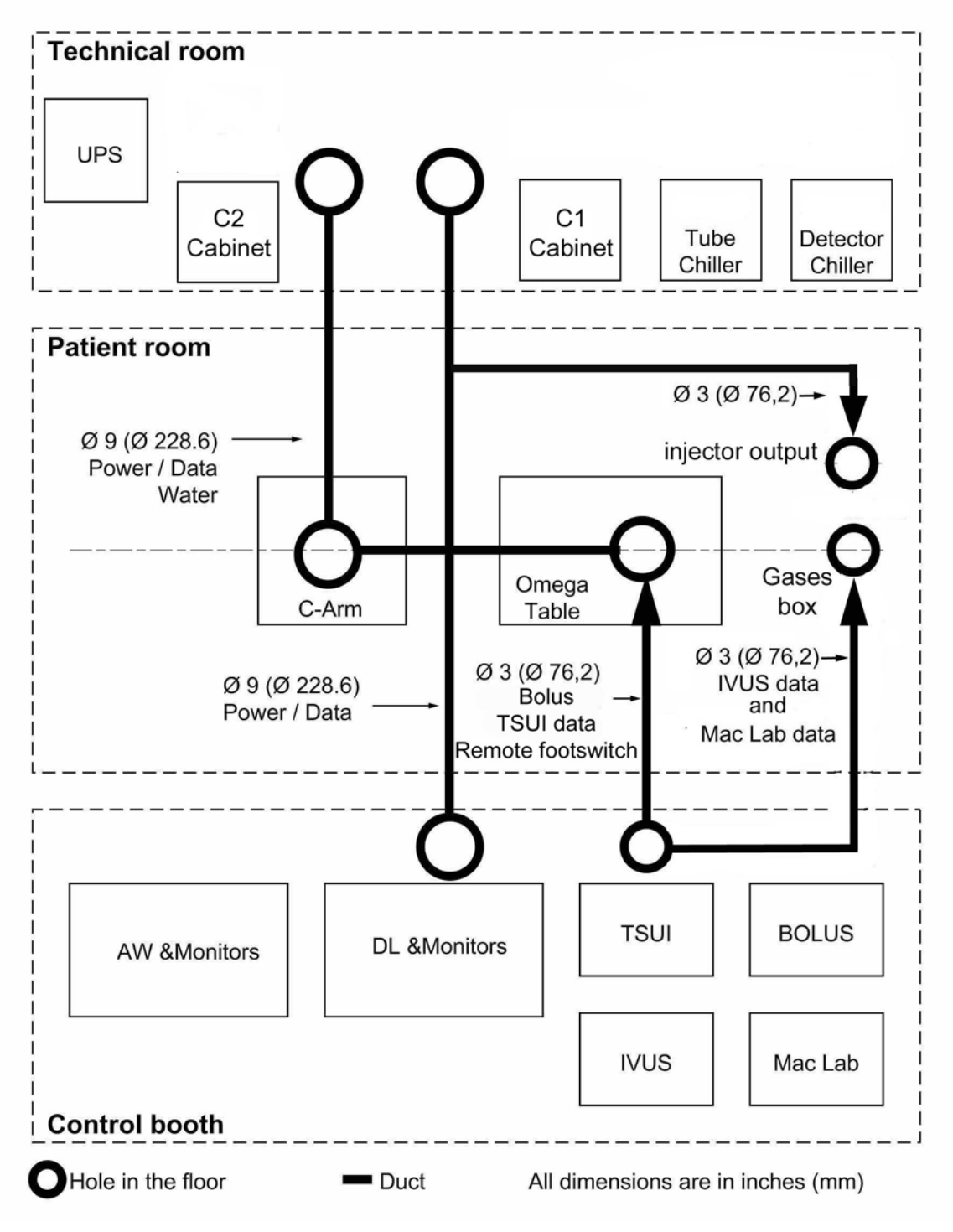

16 Physical Runs

16.1 Physical Run Synoptic

Illustration 6-19:

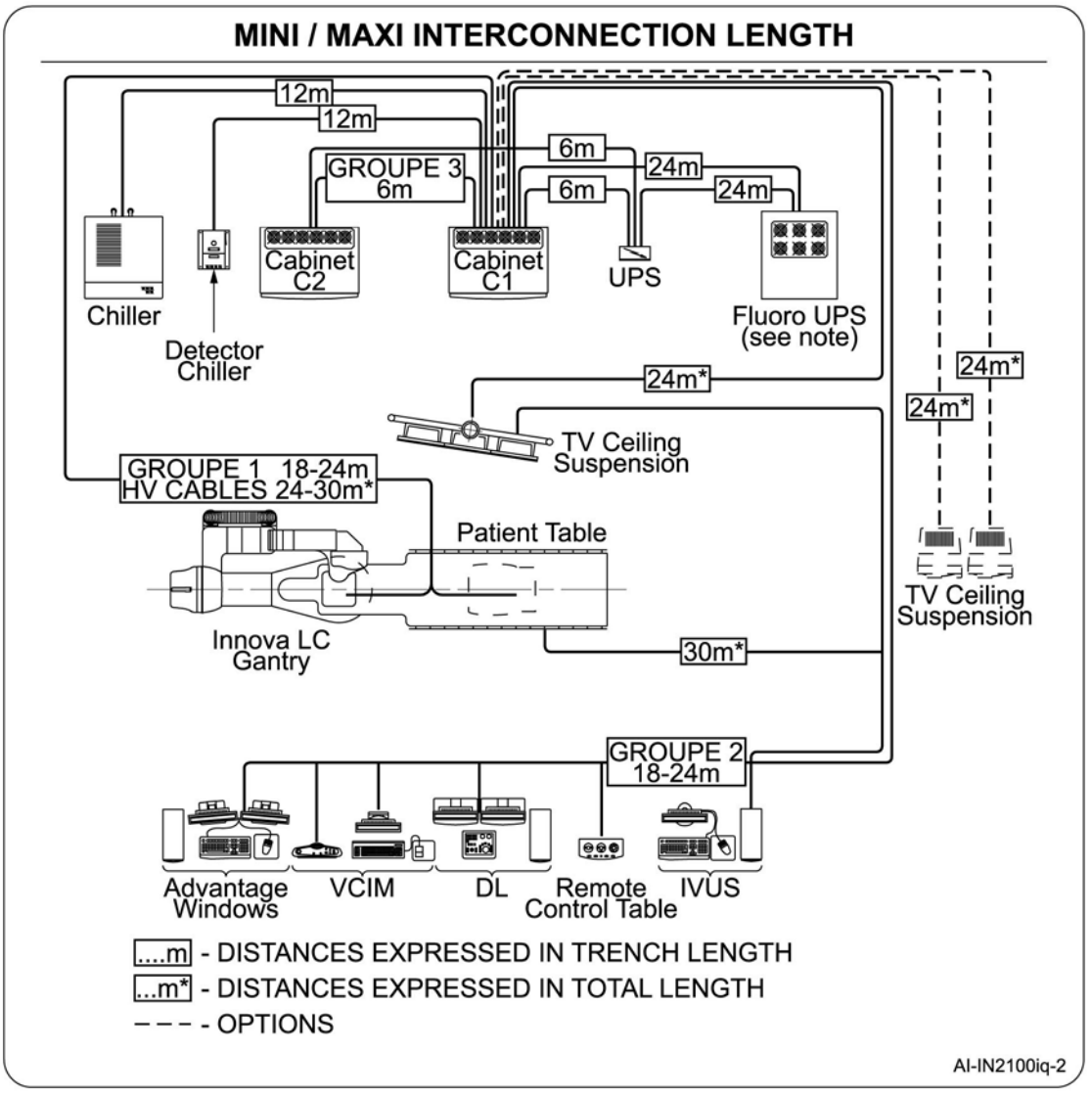

16.2 System Core Matrix

NOTICE

All lengths of cable are:

- **in useable meter when you look at group level, or**
- **in meters (connector to connector) when you look at the cable level.**

For a description of how to use the following cable group schematics, see below:

Illustration 6-20:

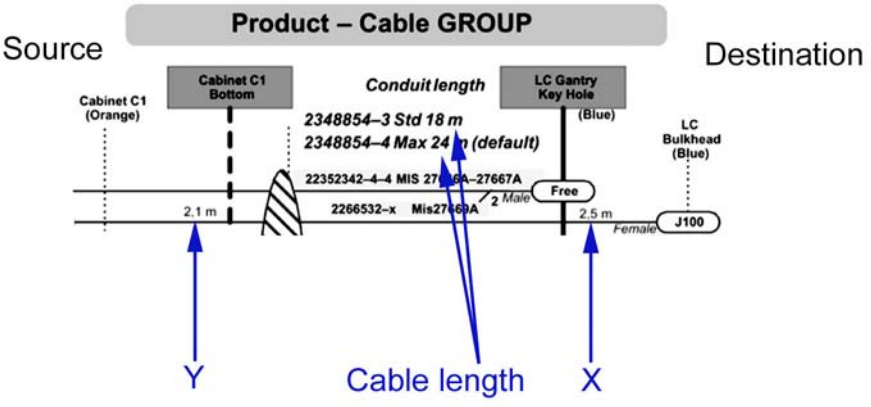

Cable length data is as follows:

- **Cable Length** = the total cable length, connector to connector (example above is 18/24 meters).
- **X + Y** = used length for connection within system (example above is 4.6 meters).
- **Cable Length - (X + Y)** = available length for conduit run (example above is 13.4 or 19.4 meters).

Illustration 6-21: Cable Group 1 – From Technical Area To Exam Room

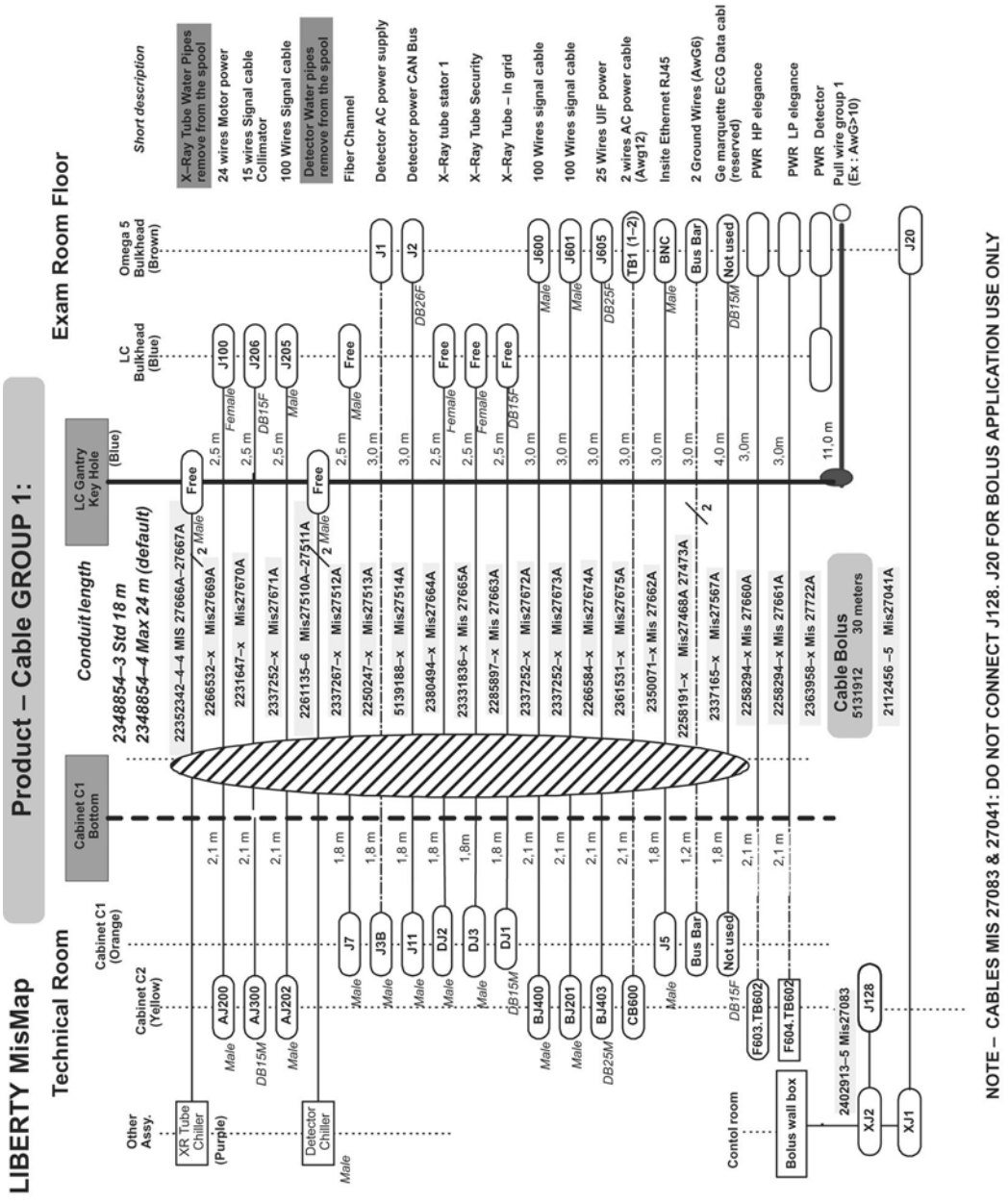

Illustration 6-22: Cable Group 2 – From Technical Area to Control Room

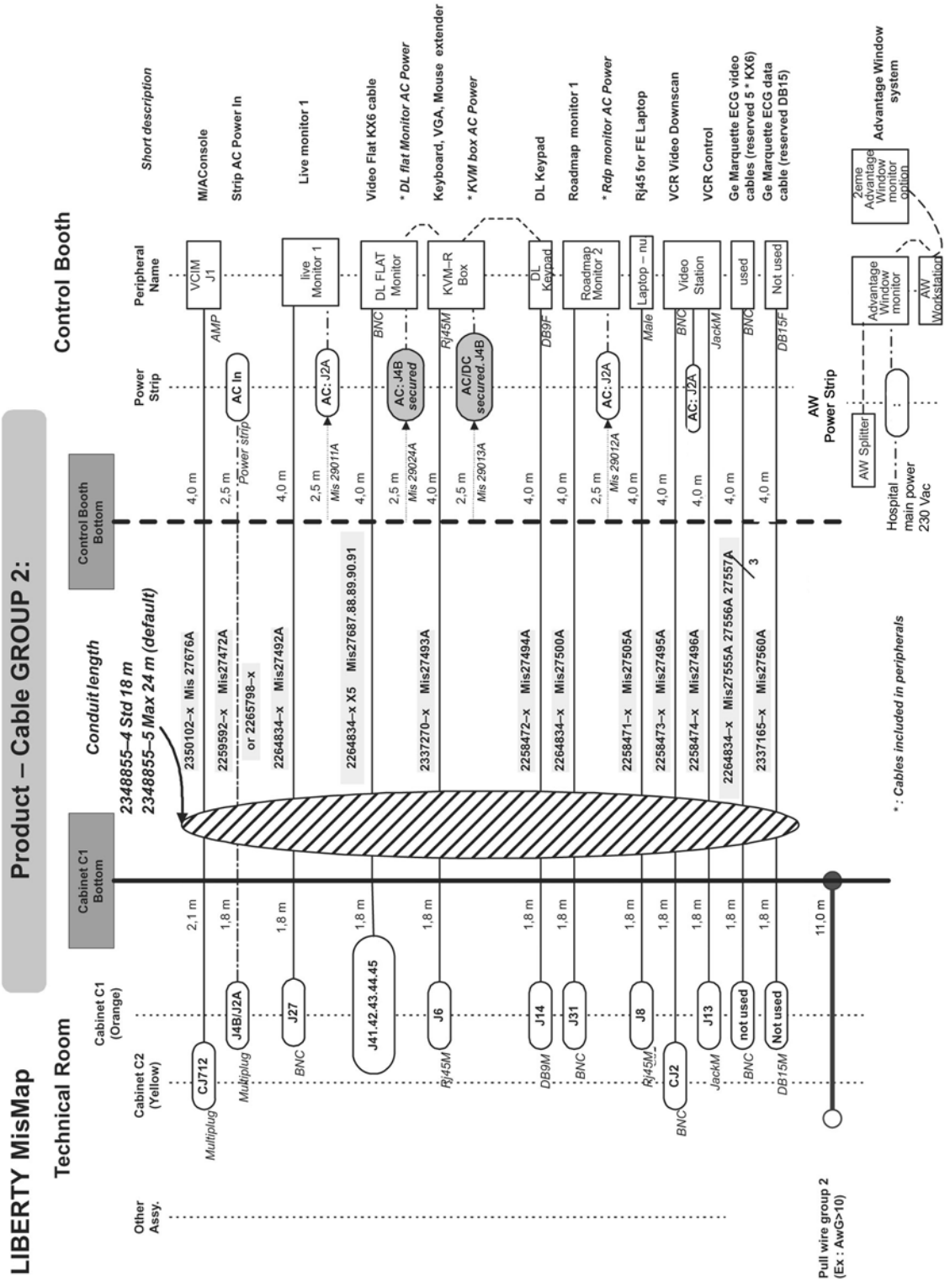

Illustration 6-23: Cable Group 3 – From Technical Area to Technical Area C1 To C2

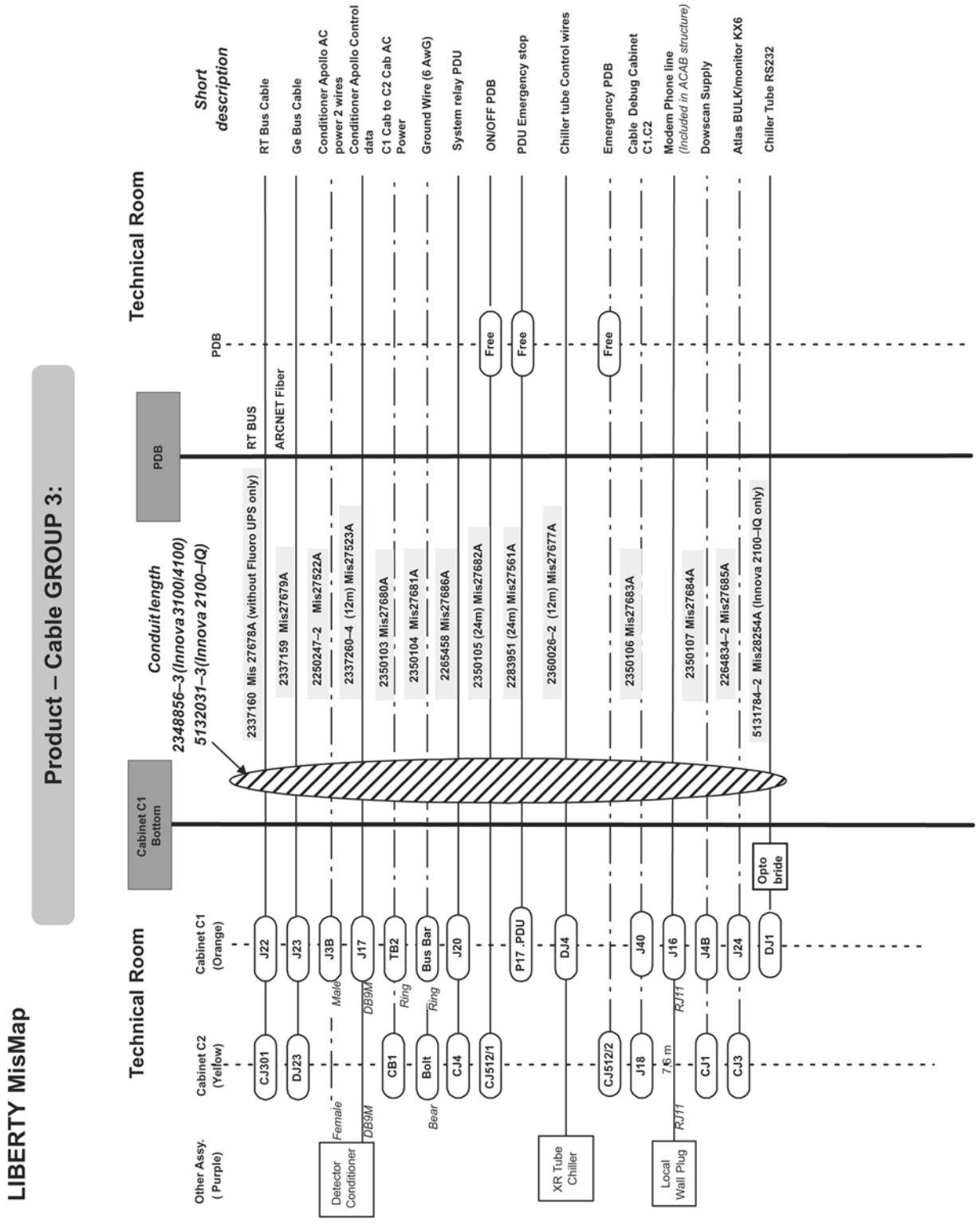

Illustration 6-24: Cable Group 4

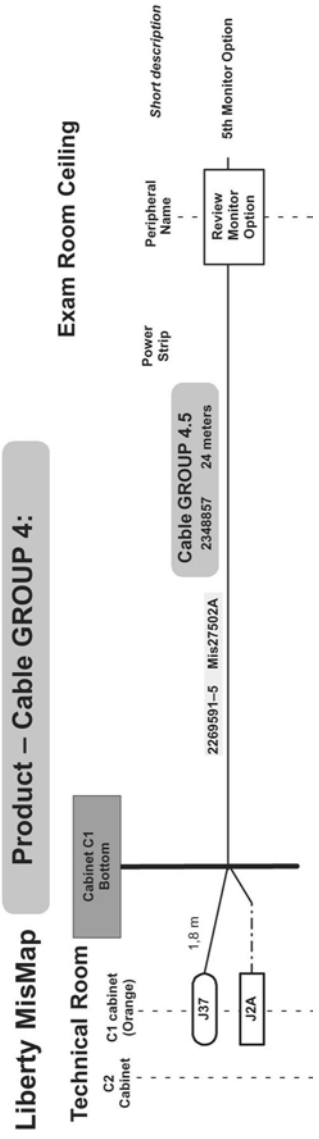

Suspension are always pre–cabled with 24 meter cables of connector to connector Monitor options includes their 24 meters length for cabling. Extension cables (6 or 12 meters) are available for the suspension or optional monitors.

Illustration 6-25: Cable Group 4 with LCD Suspension

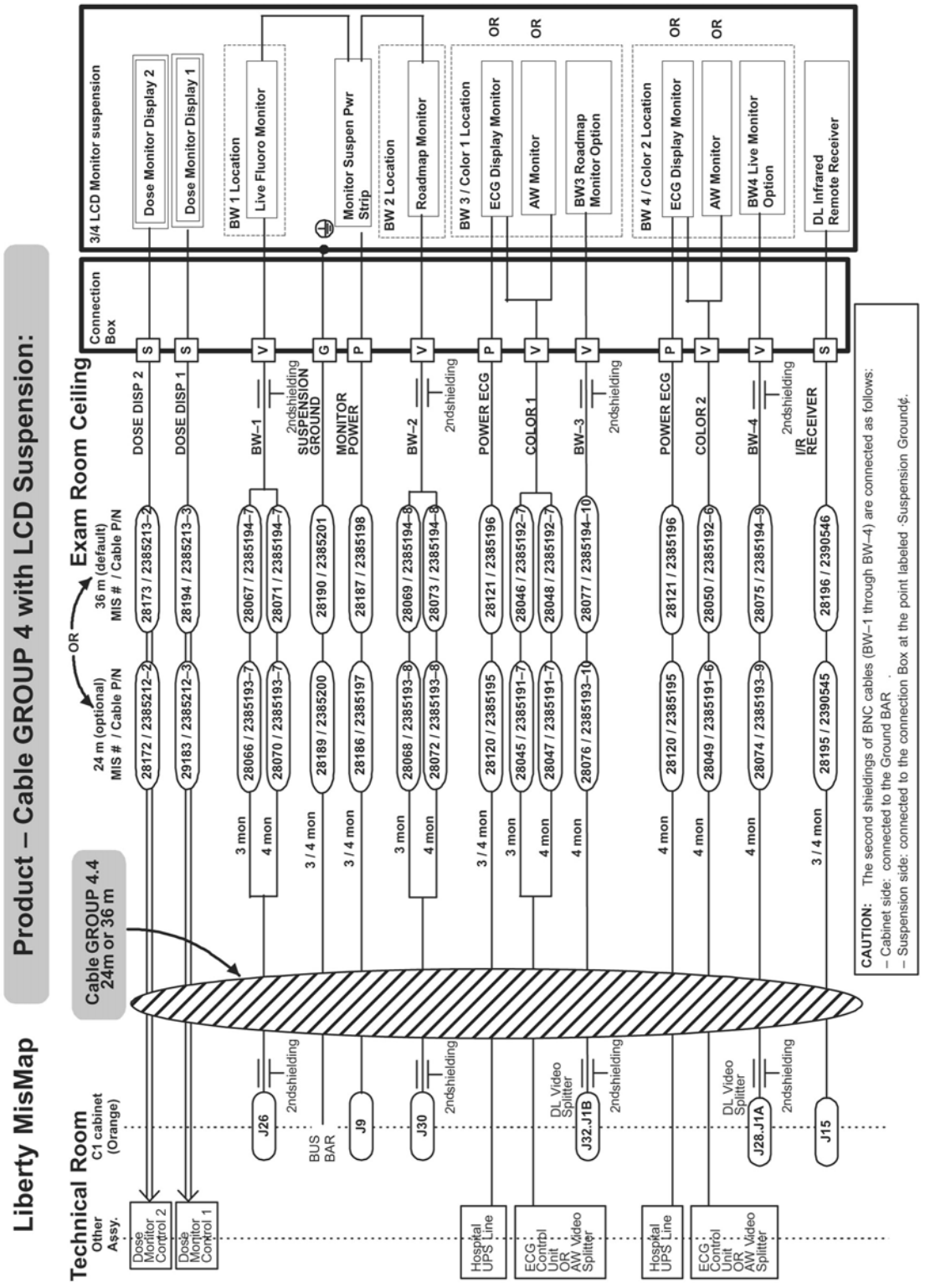

Illustration 6-26: UPS Option Cable Set

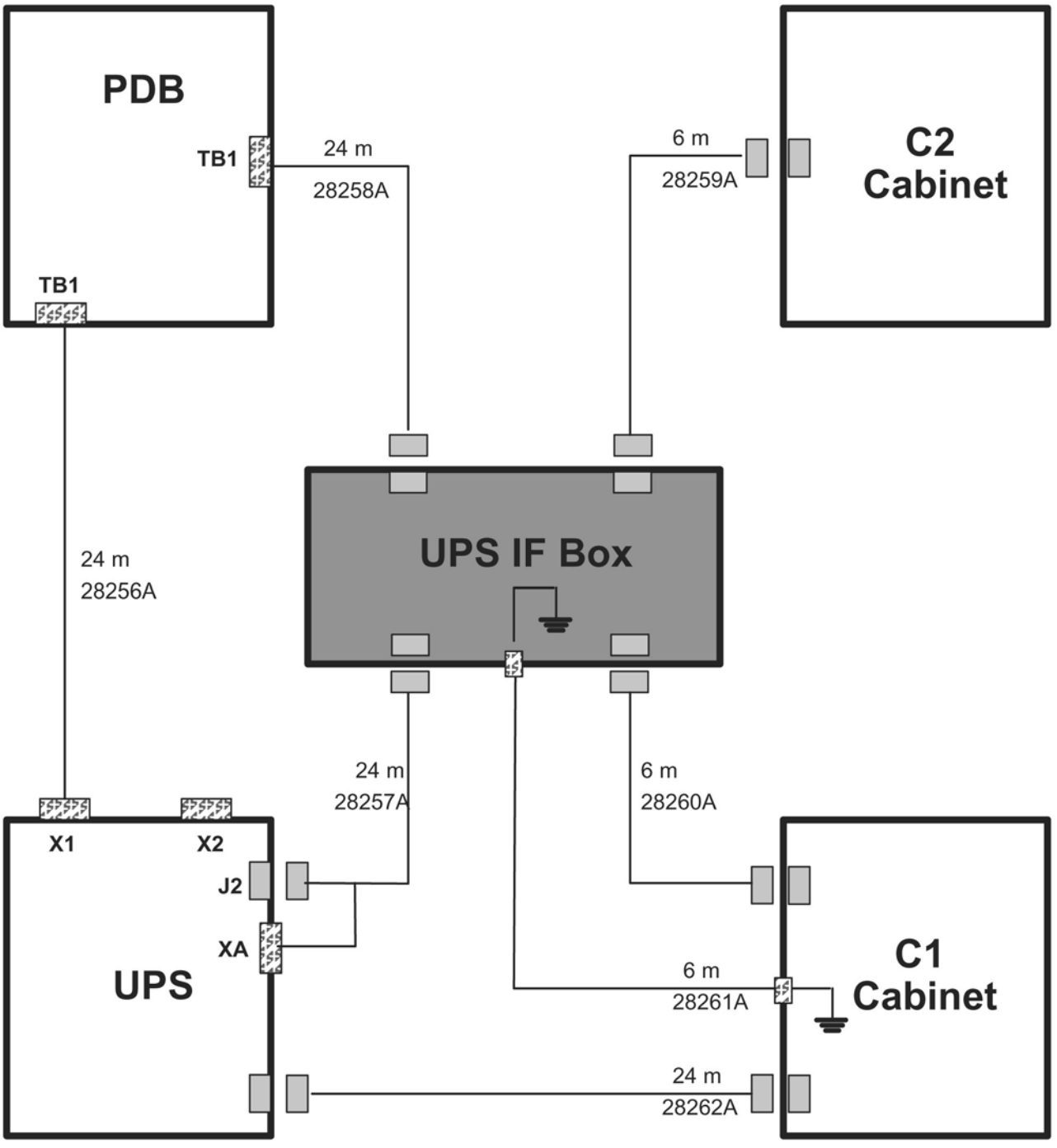

16.3 PHYSICAL RUN – SYSTEM CORE DETAIL

Table 6-4:

MIS number	Cable Assembly	UL Style	Voltage rating (V)	Max Voltage carried (V)	Cable diameter (mm)	Connector type	Bigger Plug size (mm)
Group n°1 (From C1 / C2 cabinets to LC positioner / Table)							
27663A	2285897	2789	600		13.8	DB 11 pin	34.4
27664A	2380494	2463	600		8.3	Metrimate 6 pin	29
27665A	2331836	2463	300		9.2	Metrimate 6 pin	29
27666A	2352342	WATER HOSE					
27667A	2252342	WATER HOSE					
27468A	2258191	1019	600		9.1	Pre-stripping, ring terminal	12
27473A	2258191	1019	600		9.1	Pre-stripping, ring terminal	12
27670A	2231647	2789	300			HES 15 pin	
27510A	2261135	WATER HOSE					
27511A	2261135	WATER HOSE					
27512A	2337267	FIBER OPTIC					
27513A	2250247	2464	300		7	CEI 320 - HBL4570C plug	38.6
27514A	5139188	2789	30		7.3	DB 26 pin	41.2
27675A	2361531	Type CL2	150		8.2	Pre-stripping	8.2
27567A	2337165	2464	300		9.9	DB 15 pin	41.9
27660A	2258294		600		6.5	Pre-stripping	
27661A	2258294		600		6.5	Pre-stripping	
27662A	2350071		30		7	AMP 8 pin RJ45	
27669A	2266532	2464	300		16.2	Circular connector	47.8
27671A	2337252	2789	30		10.9	Amplimite 100 pin	84.6
27673A	2337252	2789	30		10.9	Amplimite 100 pin	84.6
27672A	2337252	2789	30		10.9	Amplimite 100 pin	84.6
27674A	2266584	2464	300		10.6	DB 25 pin	56.6
Following cables are part of component							
27586A	2260420						
27722A	2363958		300		15	AMP 25 pin	55
27589A	2258207	Locaflex spec. 1311418A			11.7	HV plug	72
27590A	2115483	Locaflex spec. 1311418A			11.7	HV plug	72
Group no.2 (From C1 / C2 cabinets to Control Booth)							
27676A	2350102		300		8.3	SCSI.50	60
27472A	2259592	4299	300	250		8 plug power strip CEI320 - (HBL4570C plug - ring terminal)	39
27492A	2264834	1354					
27493A	2337270	Category 5	150		5.5	RJ45	14.1

Table 6-4: (cont'd)

MIS number	Cable Assembly	UL Style	Voltage rating (V)	Max Voltage carried (V)	Cable diameter (mm)	Connector type	Bigger Plug size (mm)
27494A	2258472	2464	300		6	DB 9 pin	30.9
27495A	2258473	1354	30		7	BNC 75 ohms	14.3
27496A	2258474	2095	300		4.1	Jack plug	25
27500A	2264834	1354	30		6	BNC 75 ohms	14.4
27505A	2258471	Category 5	150		5.5	RJ45	14.1
27555A	2264834	1354	30		6	BNC 75 ohms	14.4
27556A	2264834	1354	30		6	BNC 75 ohms	14.4
27557A	2264834	1354	30		6	BNC 75 ohms	14.4
27558A	2264834	1354	30		6	BNC 75 ohms	14.4
27559A	2264834	1354	30		6	BNC 75 ohms	14.4
27560A	2337165	2464	300		9.9	DB 15 pin	41.9
27686A	2265458	2464	300		8.1	DB 9 pin	34.4
27687A	2264834	1354	30		6	BNC 75 ohms	14.4
27688A	2264834	1354	30		6	BNC 75 ohms	14.4
27689A	2264834	1354	30		6	BNC 75 ohms	14.4
27690A	2264834	1354	30		6	BNC 75 ohms	14.4
27691A	2264834	1354	30		6	BNC 75 ohms	14.4
27041A	2112456	2464	300		7.7	DB 9 pin	30.9
27083A	2126755	2464	300		7.7	DN 9 pin	30.9
29010A	5305995	2464	300			IEC Power Connectors	
29011A	5305995	2464	300			IEC Power Connectors	
29012A	5305995	2464	300			IEC Power Connectors	
29013A	5305997	2464	300			IEC Power Connectors	
29024A	5305995	2464	300			IEC Power Connectors	
Group no.3 (From C1 to C2 cabinets)							
27677A	2360026	2463	600		8.3	Metrimate 6 pin	29.8
		2463	600		13.1	Terminal ends - ring terminals	13.1
27678A	2337160	Type CL2	Low Volt-age SCSI		10	SCSI 50C	77
27679A	2337159	Fiber Optic					
27522A	2250247	2464	300		7	CEI 320 - HBL4570C plug	38.6
27523A	2337260						
27680A	2350103			600			
27681A	2350104						
27682A	2350105						
27683A	2350106						
27684A	2350107						
27685A	2264834						
28254A	5131784-2						

Table 6-4: (cont'd)

MIS number	Cable Assembly	UL Style	Voltage rating (V)	Max Voltage carried (V)	Cable diameter (mm)	Connector type	Bigger Plug size (mm)
Following cables are part of component							
27587A							
27561A	2283951						
Group no.4-3 (From C1 / C2 cabinets to Monitors - Standard Suspension)							
27502A	2269591-5	2343	300		16	(CEE22 - ring terminal - BNC50) - (BNC50 - ring terminal - HBL4570C plug)	38.6
Group no. 4-4 (From C1 / C2 cabinets to Connection Box - LCD Suspension)							
28045	2385191-7		30V			VGA	
28046	2385192-7		30V			VGA	
28047	2385191-7		30V			VGA	
28048	2385192-7		30V			VGA	
28049	2385191-6		30V			VGA	
28050	2385192-6		30V			VGA	
28066	2385193-7	1354	30V			BNC	14.4
28067	2385194-7	1354	30V			BNC	14.4
28068	2385193-8	1354	30V			BNC	14.4
28069	2385194-8	1354	30V			BNC	14.4
28070	2385193-7	1354	30V			BNC	14.4
28071	2385194-7	1354	30V			BNC	14.4
28072	2385193-8	1354	30V			BNC	14.4
28073	2385194-8	1354	30V			BNC	14.4
28074	2385193-9	1354	30V			BNC	14.4
28075	2385194-9	1354	30V			BNC	14.4
28076	2385193-10	1354	30V			BNC	14.4
28077	2385194-10	1354	30V			BNC	14.4
28120	2385195		300			Power	
28121	2385196		300			Power	
28172	2385212-2	2789	30			DB-9pin	
28173	2385213-2	2789	30			DB-9pin	
28186	2385197		300			Power	
28187	2385198		300			Power	
28189	2385200					G/Y	
28190	2385201					G/Y	
28194	2385213-3	2560	30		6.6		
28195	2390545	2789	300			DB-9pin	
28196	2390546	2789	300			DB-9pin	
29183	2385212-3	2560	30		6.6		

17 PIST0021 - US Fluoro UPS and PDB connection

17.1 Personnel Requirements

Required Persons	Preliminary Reqs	Procedure	Finalization
1	Not Applicable	1 hour	Not Applicable

17.2 Preliminary Requirements

17.2.1 Tools and Test Equipment

Item	Qty	Effectivity	Part#	Manufacturer
Standard Service Engineer's toolkit	1	-	-	-

17.2.2 Required Conditions

Condition	Reference	Effectivity
The PDB is already installed	-	-
Power cables are as follows: (1) From PDB to UPS rectifier input = 4x6 AWG recommended (4x3 AWG max) (3ph + PE). (2) Bypass = 5x8 AWG recommended (5x3 AWG max)(3ph + N+PE). (3) From UPS output to PDB = 5x8 AWG recommended (5x3 AWG max)(3ph + N+PE)..	-	-
Cable sizing shall follow local requirements.	-	-
Power cable Mechanical Terminals Torque Specification: < 3 Nm / < 27 lb.in for 20 AWG to 3 AWG.	-	-
Check the UPS shipping date marked on the packaging label. Commissioning of the UPS must be performed within 3 months after that date.	-	-

17.3 Procedure

17.3.1 Connection of the Power Distribution Box

NOTICE

Hospital main power must enter from the Top. Correct phase sequence during installation is very important. Phase failure relays are provided to monitor voltages less than 85%, loss of a phase, or incorrect phase sequence. Corrections to the phase sequence must be corrected only at the line side of the main circuit breaker CB1.

1. Connect the ON/OFF, Remote control and Emergency Power Off devices.

Illustration 6-27:

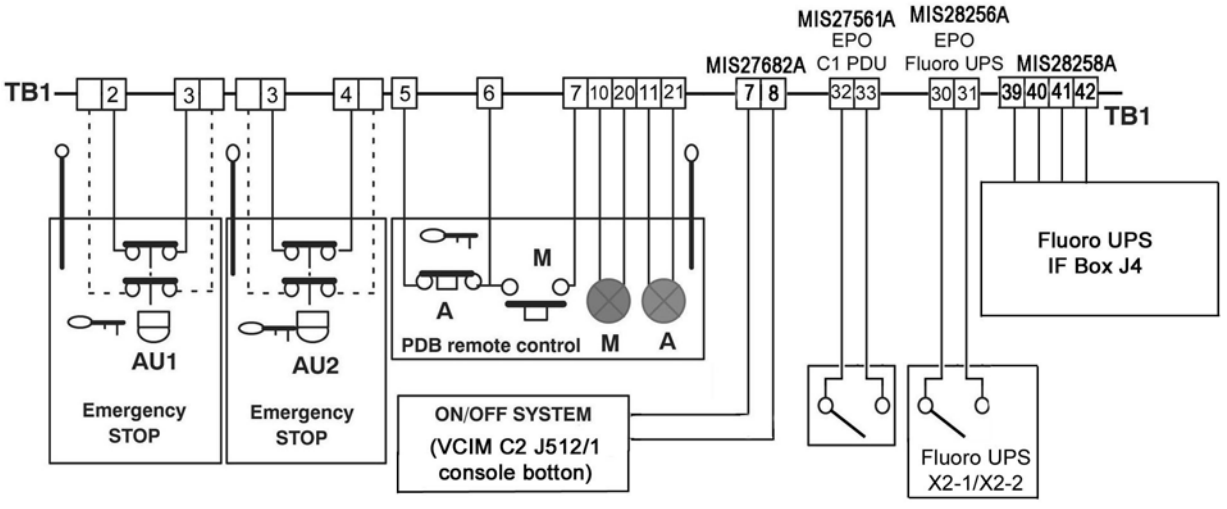

2. If the Fluoro UPS option is installed, remove the L1A, L2A and L3A jumpers linking the Power Distribution Block 1 and the Power Distribution Block 2.

Illustration 6-28:

3. Connect the Power distribution cables.

Illustration 6-29:

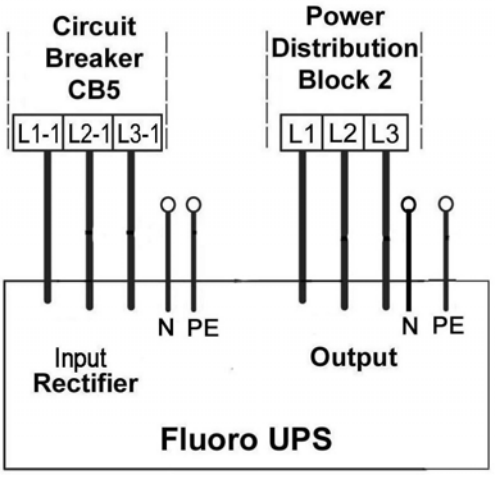

17.3.2 Connection of the Fluoro UPS Option Cables

1. Connect the Fluoro UPS power cables.

   a. Remove the protection panel 1 .

Illustration 6-30:

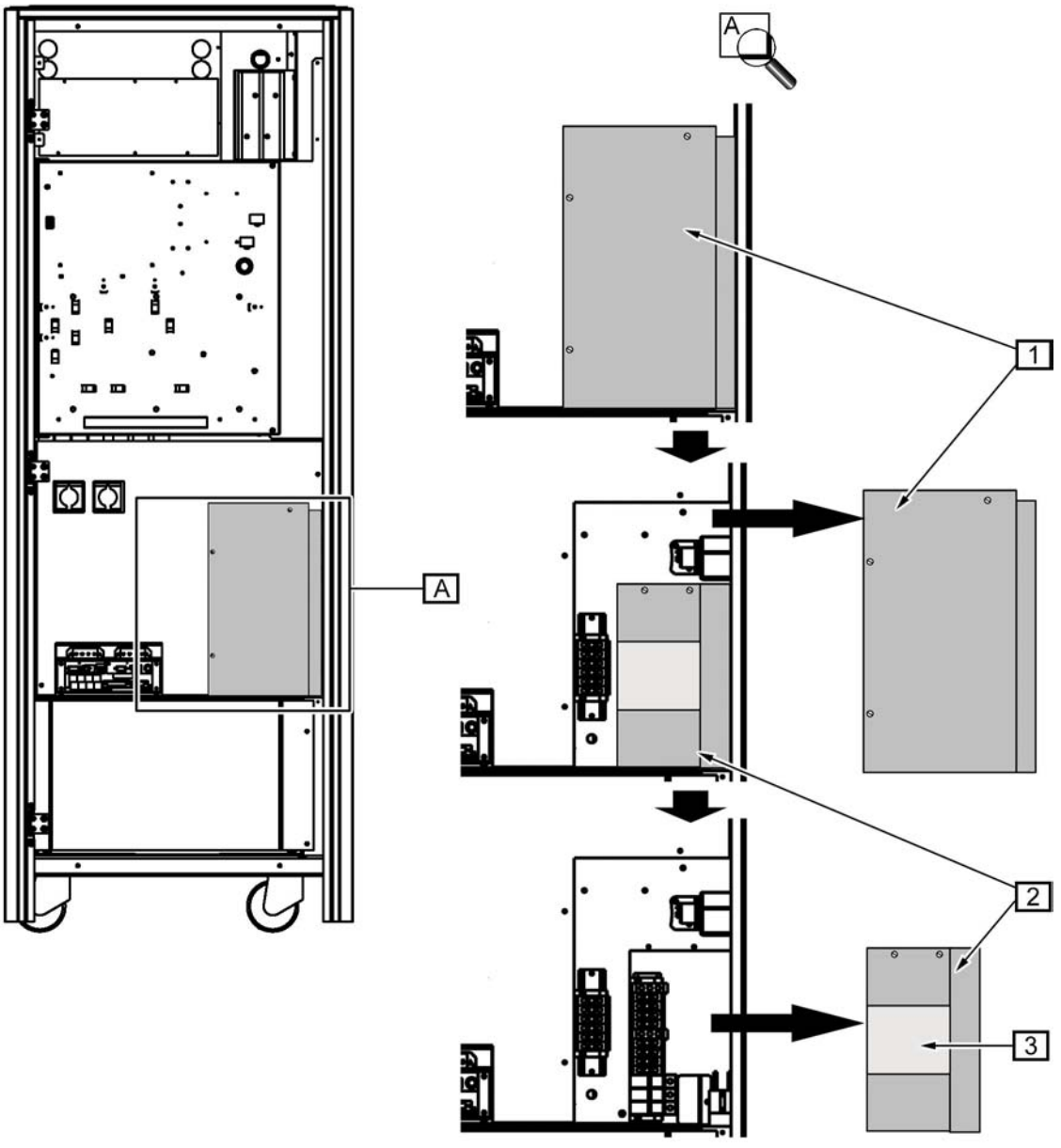

b. Remove the protection panel (2 , Illustration 6-30).

c. Remove the metallic window 3 from the protection panel 2 (Illustration 6-30).

d. The power cable shall enter the UPS by the bottom right hand side entry:

   i. Remove RHS UPS cover (remove two top screws make two bottom screws loose),

   ii. Remove bottom cover plate.

Illustration 6-31:

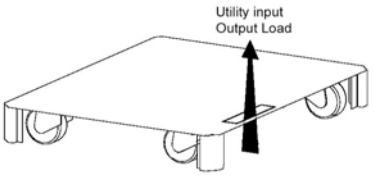

iii. Drill a hole in the bottom cover plate for cable access.

WARNING

RISK OF ELECTRIC SHOCK
HIGH VOLTAGE PRESENT
THE FLUORO UPS REQUIRES COMMON POWER INPUT FOR RECTIFIER AND BYPASS . JUMPERS SHALL BE KEPT.

e. Check the jumpers linking the terminals L1-2, L2-2 and L3-2, are properly installed.

Illustration 6-32:

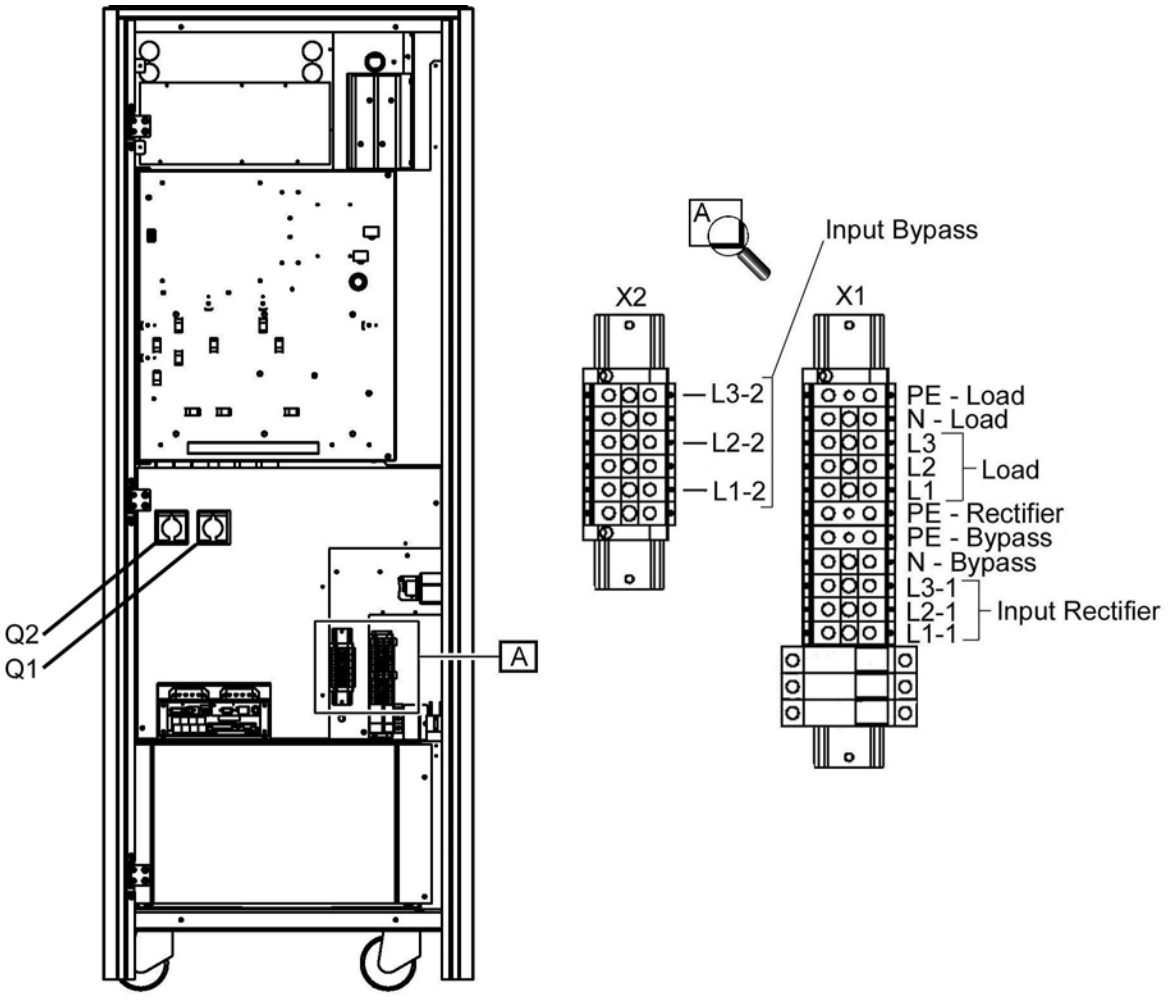

f. Connect the Fluoro UPS rectifier input cable from PDB CB5 as follows (Illustration 6-32):

- Rectifier input phase 1 to X1-L1-1 terminal,
- Rectifier input phase 2 to X1-L2-1 terminal,
- Rectifier input phase 3 to X1-L3-1 terminal,
- Rectifier ground to X1-PE-rectifier terminal.

g. Connect the Fluoro UPS output cable from PDB power block 2 as follows (Illustration 6-32):

- Output load 1 to X1- L1 terminal,
- Output load 2 to X1-L2 terminal,
- Output load 3 to X1-L3 terminal,
- Output load neutral to X1-N-Load terminal.
- Ground to X1-PE-Load terminal.

2. Tie the power cables to the UPS and place the protection plates back on the UPS.

17.4 Finalization

No finalization steps.

Chapter 7 Additional Planning Aids

1 Shipping Information

1.1 Product Shipping Information

Refer to the table below. To obtain shipping information for components not specified in the table, refer to the appropriate component Pre-Installation Manual listed in Chapter 2, Section 3, Basic Innova LC System Compatability.

Table 7-1:

PRODUCT OR COMPONENT	DIMENSIONS INCHES (METERS)			WEIGHT POUNDS (KILOGRAMS)	METHOD OF SHIPMENT
	Height	Width	Depth		
Innova LC Positioner	77 (1.95)	110 (2.79)	45.5 (1.16)	2,340 (1060)	Shipping Dolly. See Illustration 7-1
	90.5 (2.30)	54.5 (1.38)	114 (2.90)	2,645 (1200)	Air shipment. See Illustration 7-2
C2 Cabinet	70.8 (1.80)	35.4 (0.90)	25.6 (0.65)	769.4 (349)	On pallet. See Illustration 7-3
Omega Table Base Assembly	49 (1.24)	38 (0.96)	84.2 (2.14)	1,290 (585)	On pallet. See Illustration 7-4
Omega Table Top Assembly	9 (0.22)	137 (3.47)	33 (0.84)	155 (70)	On pallet. See Illustration 7-4
Tilt Table Base Assembly	47.2 (1.2)	33.5 (0.85)	93 (2.36)	1653 (750)	On pallet. See Illustration 7-6
C1 Cabinet	70.8 (1.80)	35.4 (0.90)	25.6 (0.65)	1226 (556)	On pallet. See Illustration 7-3
DL User parts	41 (1.04)	33.9 (0.86)	26.8 (0.68)	220 (100)	On pallet
Videostation VCR	11.5 (0.29)	21.3 (0.54)	16.2 (0.41)	210 (95)	On pallet
X-Ray tube housing	37.7 (0.96)	30.3 (0.77)	28 (0.71)	250 (113)	On pallet
Chiller	53 (1.35)	34.8 (0.87)	41 (1.04)	670 (304)	On pallet
Innova LC Requisites					On pallet
Cables					On pallet
TV monitor susp. bridge	25.2 (0.64)	38.6 (0.98)	120.5 (3.06)	445 (210)	On pallet
TV monitor susp. rails	15 (0.38)	12 (0.30)	235 (5.96)	355 (160)	On pallet
Fluoro UPS UL (*)	82.7 (2.1)	35 (0.89)	39.4 (1)	1235 (561)	On pallet
Fluoro UPS CE (*)	68.9 (1.75)	35 (0.89)	39.4 (1)	1287 (585)	On pallet

(*) Estimated values

1.2 Detail Of Innova Shipping Information

1.2.1 Innova LC Positioner Gantry On Shipping Dolly

Illustration 7-1:

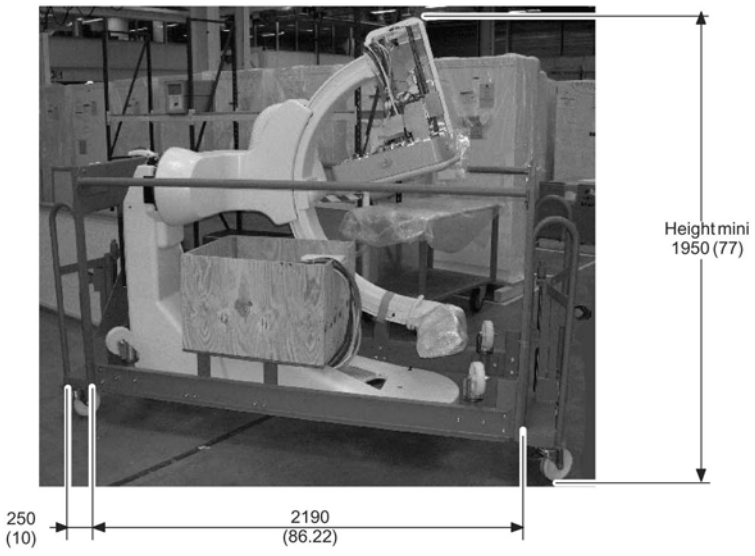

All dimensions are in mm (in inches)

1.2.2 Innova LC Positioner Air Shipment

Illustration 7-2:

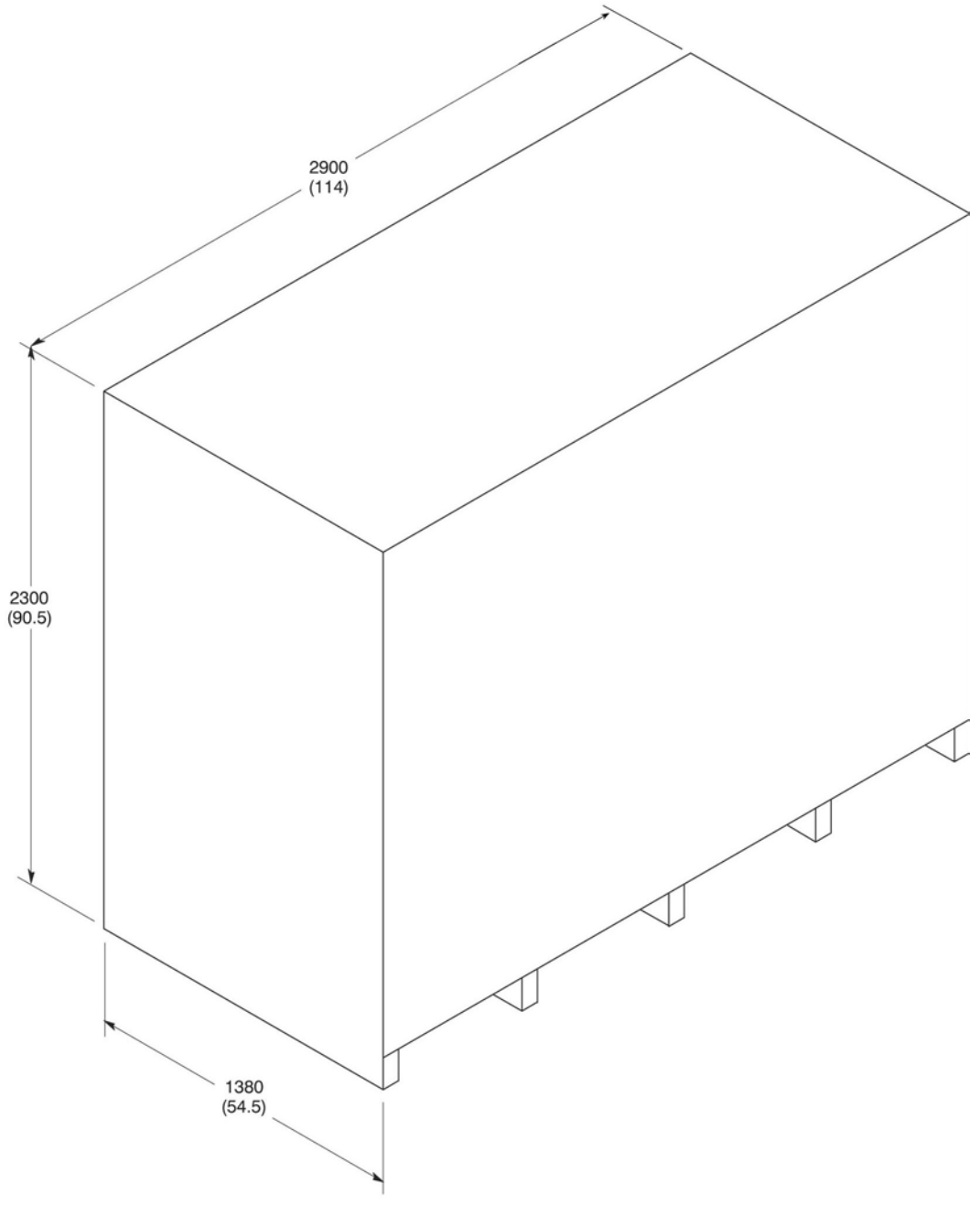

DIMENSIONS IN MM (INCHES)

NOT TO SCALE

1.2.3 Innova C1 and C2 Cabinet on pallet

Illustration 7-3:

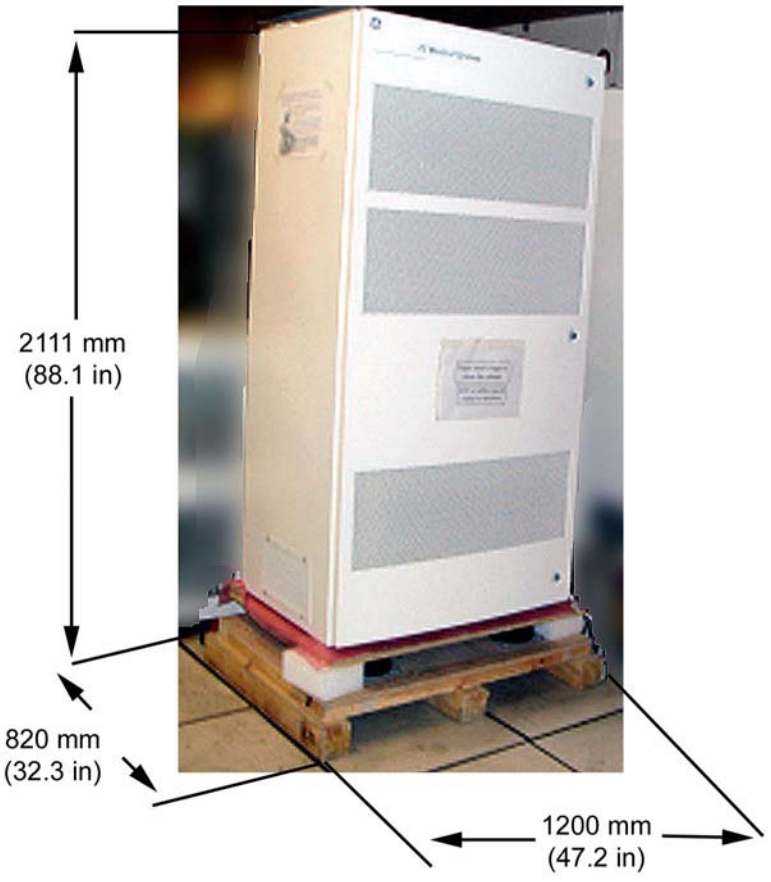

The shipping weight is of about 81 lbs..

1.2.4 Omega Shipment

Illustration 7-4:

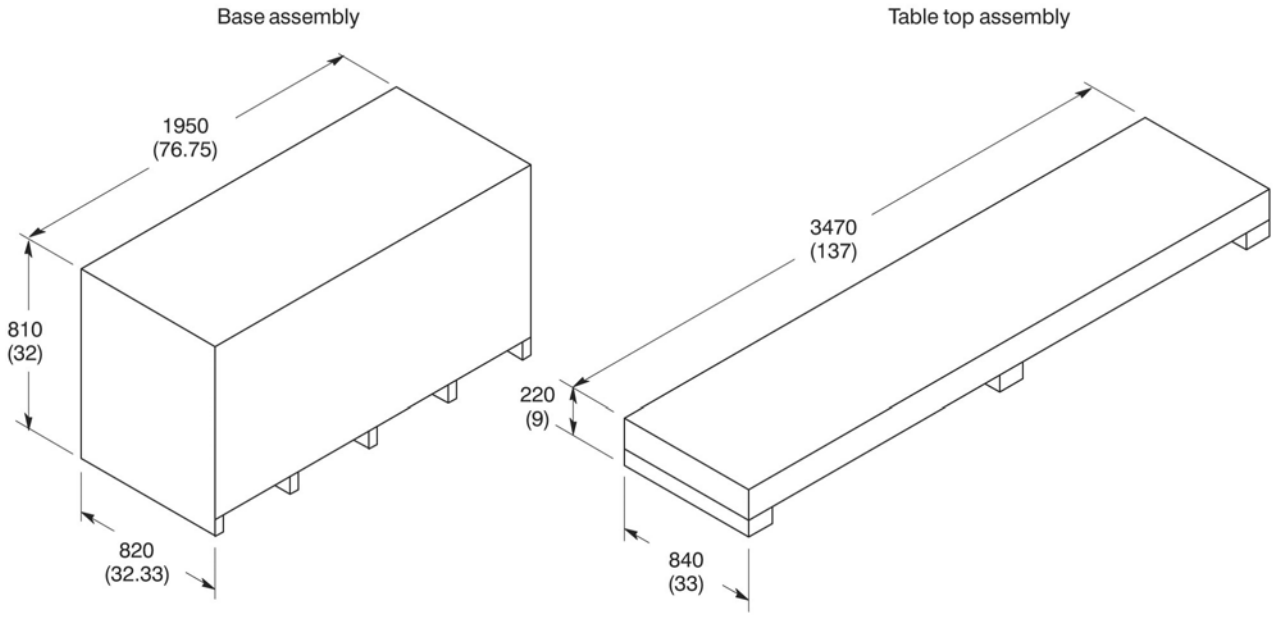

DIMENSIONS IN MM (INCHES)

NOT TO SCALE

1.2.5 Omega Using Positioner Dollies

Illustration 7-5:

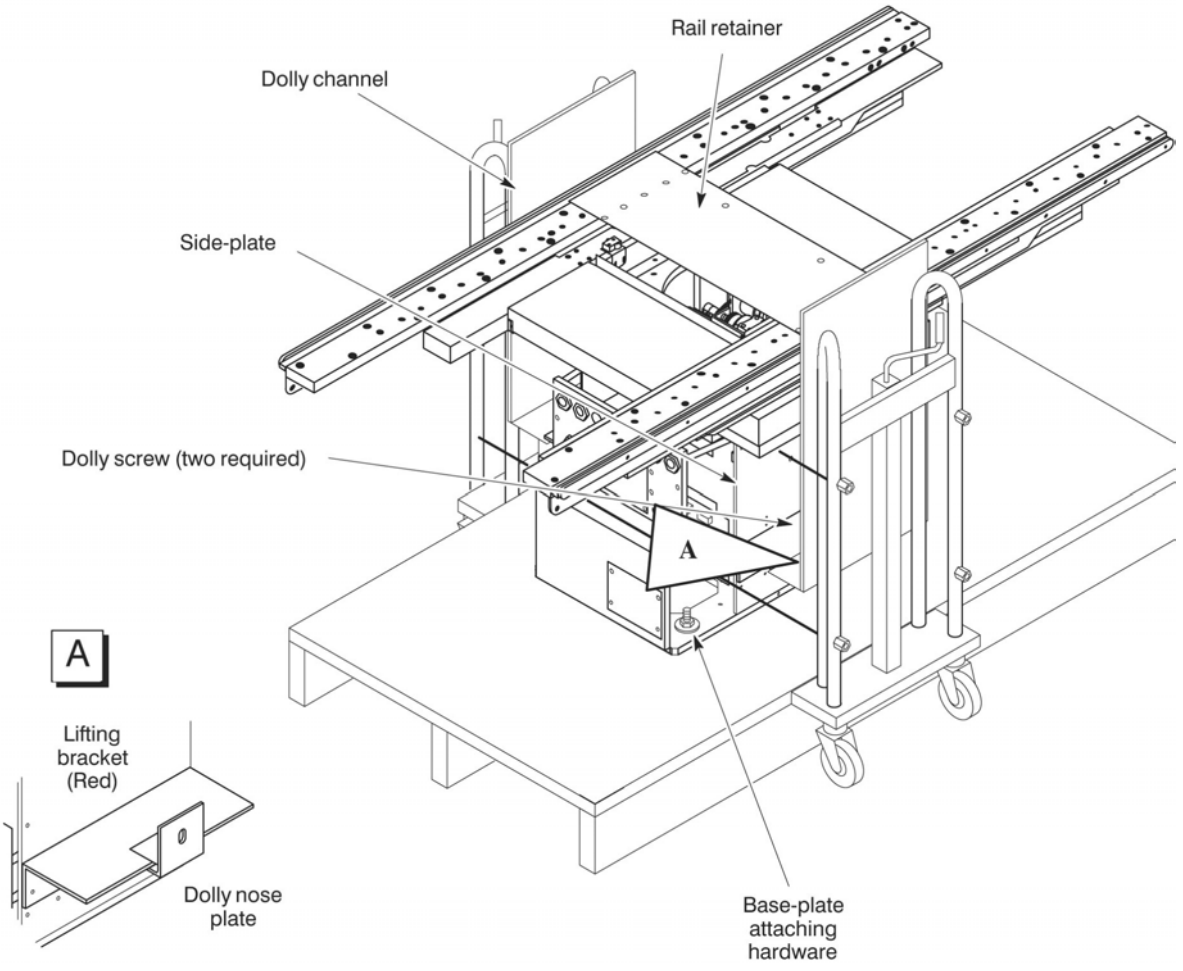

1.2.6 Tilt Table Shipment

Illustration 7-6:

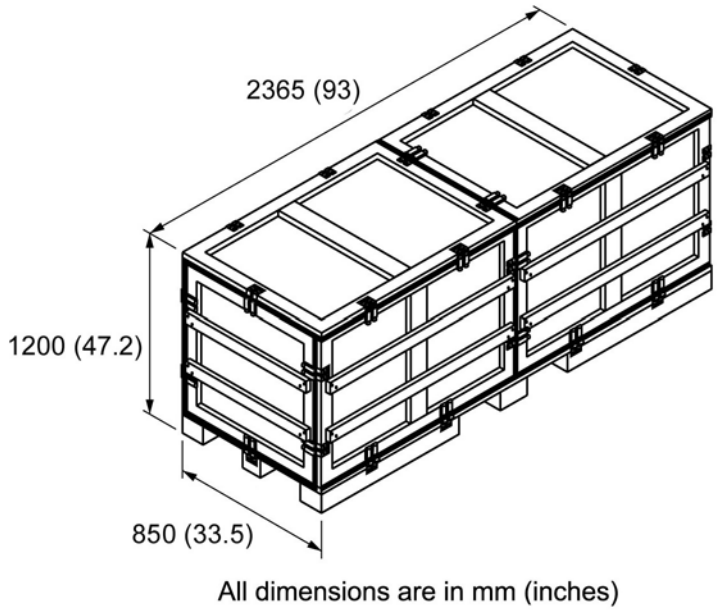

1.2.7 Other Elements Package

NOTE: All OEM parts are shipped inside there original boxes group as needed on pallets.

Illustration 7-7:

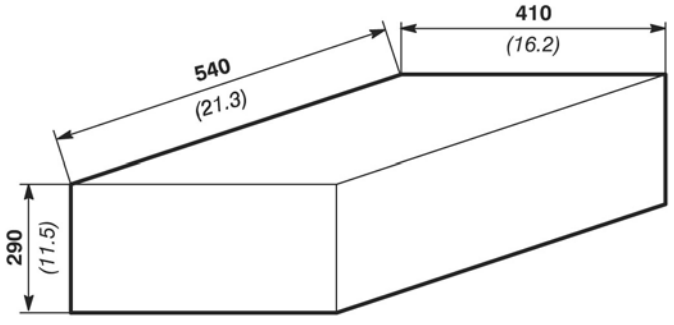

2 Tools and Test Equipment

Refer to Table 7-2 . To obtain a list of tools and test equipment for components not specified in Table 7-2 , refer to the appropriate component Pre-Installation Manual listed in Chapter 2, Section 3, Basic Innova LC System Compatability.

Table 7-2:

PRODUCT OR COMPONENT	TOOL OR TEST EQUIPMENT	USED FOR	SOURCE	RECEIVED (DATE)
Innova LC Positioner	Service Engineer's Tool Case	General Use		
	Level, Protractor Type	Positioner Checks		
	Plumb Line included in 46-216640G1	Positioner Checks		
	Torque Wrench 2 to 20 daN.m (15 ft. lbs. to 150 ft. lbs.)	Positioner Checks		
	1/2 inch Ratchet Wrench (2)	Raise and Lower Positioner shipping dolly		
	Wrench, Spanner (46-176584P1)	High Voltage Cable Installation		
	Laptop Computer (MS-DOS Windows)	Positioner Configura-tion and Calibration		
Status Display	Same as for Innova LC (Service Engineer's Tool Case)			
Omega/Tilt Table	Same as for Innova LC (Service Engineer's Tool Case) Fill in any additional tools or test equipment as required			
C2 Cabinet	Same as for Innova LC (Service Engineer's Tool Case) Fill in any additional tools or test equipment as required			
X-Ray Head	Same as for Innova LC (Service Engineer's Tool Case) Fill in any additional tools or test equipment as required			
C1 Cabinet	Same as for Innova LC (Service Engineer's Tool Case) Fill in any additional tools or test equipment as required			
	Same as for Innova LC (Service Engineer's Tool Case) Fill in any additional tools or test equipment as required			
	Ethernet adaptation kit for laptop 2128794	General use (to be ordered before delivery of system)		
DL User parts				

Table 7-2: (cont'd)

PRODUCT OR COMPONENT	TOOL OR TEST EQUIPMENT	USED FOR	SOURCE	RECEIVED (DATE)
Monitor Suspension				
Chiller	Phillips/Flathead screwdriver. Open chiller. Install wiring and hoses.			

3 Route Survey

3.1 Step One — Sketch

Start preparing Route Survey by sketching a floor plan of the hospital or clinic which will receive the equipment. Include all areas on the delivery route from outside the building to destination. See Illustration 7-8 .

Reference Numbers: Numbers in circles refer to Route Survey data. The Route Survey is a form on which site data are listed (see Section 3.2).

Illustration 7-8:

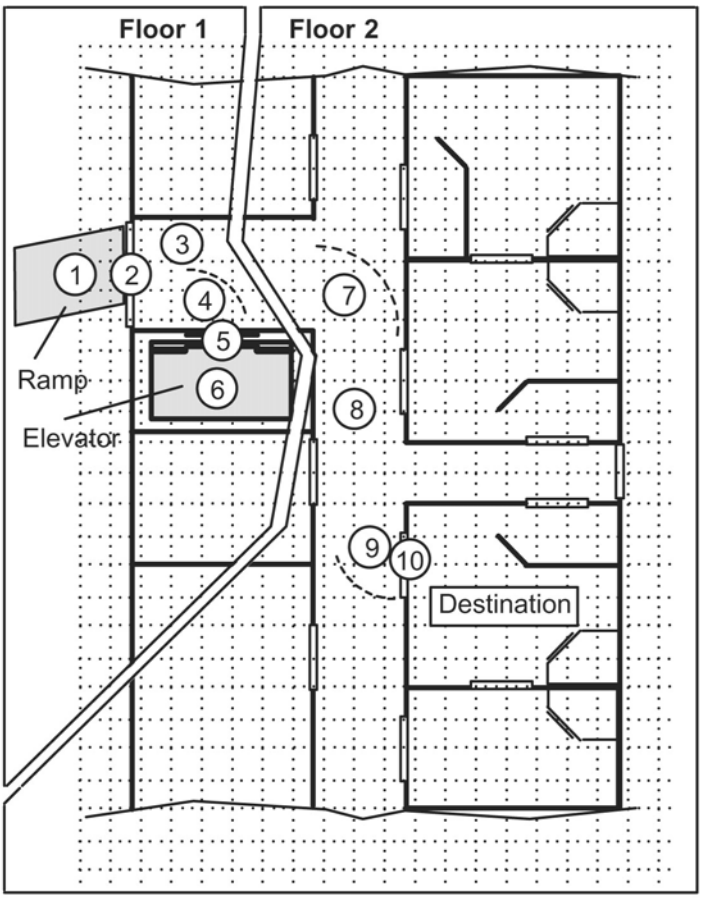

3.2 Step Two — Survey

Data concerning the intended delivery route are recorded on the Route Survey in the following pages. Record all loading capacities, corridor widths, door openings, turning radii, flooring materials, elevator sizes, obstructions and so on.

3.3 Step Three — Check

Verify equipment can be transported via the route specified in Section 3.1 . Compare Route Survey compiled in Section 3.2 to equipment specifications in this and other applicable pre–installation directions.

Table 7-3:

Ref. no.	Area: loading dock, doorway, hallway, turn, elevator, obstruction, etc.	Limitations: loading capacity, height, width, depth flooring material, radius, etc.

4 European Process Order Select

Several components like cables, stationary rails, etc. are length selectable. This selection should reflect the particularities encountered by an Installation Specialist on Site.

All cable and component selections must be sent at least 6 weeks before RSDD to your PMC. The selection tool is available on the website: http://gein.euro.med.ge.com/european_installations/

5 Pre-Installation Checklist

GE Healthcare Site Readiness Checklist	
GEHC Global Order # :	Customer:
GEHC On-site Representative :	MI Supplier:
Name of customer reviewed with :	Lead Installer:
GEHC PMI :	Phone Number:
Target Site Prep Completion Date:	Helper:
The customer is responsible for proper site preparation and site readiness regardless of any GEHC inspections/assessments.	
For MR Magnet Delivery: Ensure cryogen vents, power for the cooling system and exhaust fan system are installed and operational (0.7T, 1.5T & 3T) and chilled water supply is available 24x7 that meets system cooling equipment requirements.	
Inspection Date:	

Item #	GEHC Minimum Requirements	**Storage**: Is item ready?	**Predict (Pre-ship)**		**Verify (Delivery)**: Is item ready?	**Validate (Mech Install)**: Is item ready?	**Comments** If "N", please enter in comments or action plan
			Is this item ready?	Will item be ready?			
1	Equipment installation drawings must match actual room size and must meet clearance requirements. Deviations that meet installation requirements may be red-lined, if red-lining is allowed by local code. Seismic requirements are identified on construction drawings.	X					
2	Delivery route to installation or storage area meets requirements and has been discussed and scheduled with the customer. Ensure floor protection is discussed, requirements identified, and will be available at time of delivery and installation.					X	
3	Rooms that will contain equipment, including storage areas, are dust free. Room security to prevent unauthorized access and theft has been discussed with customer. The customer is aware of these security issues, implications and responsibility.						
4	In room HVAC ductwork and units (in room) must be mechanically installed and dust free. Installation rooms appear to meet environmental conditions (see Further Definitions) and observed issues have been communicated to the customer. If being stored, storage area must meet PIM storage criteria.						
5	Ceiling grid is installed, Unistrut is located per the installation drawings, and permanent lighting is installed and operational.	X					
6	Floor is clean and prepared for final floor covering. Customer has verified floor leveling meets the equipment installation drawings and PIM specs and no visible defects are observed. Gantry and table baseplate are installed prior to delivery (if applicable)	X					

7	Access to a working phone at the facility for emergency use, including MR magnet delivery.	X					
8	All walls primed (final coat not needed on Day 1), and counter tops that will support equipment must be installed. No dust-producing cabinetry work in installation areas.	X					
9	Mechanical supplier has been provided with a set of equipment installation drawings for reference. For California, permitted construction drawings or PMI-specified installation drawings are required.	X	X	X	X		
10	Conduit/electrical cable ducting/dividers/ access flooring installed, with the exception of surface-mounted floor ducting. Wiring to the main disconnect panel is installed and compliant with equipment installation drawings or pre-installation manual.	X	X	X	X		
Issued Date: 7/9/07 Rev 11		GEHC Only: COE # (888) 799.7266 Option 5 (PMI Support)					

Chapter 8 IP Addressing Process

1 IP Addressing Process

To obtain an IP address, contact the following for your pole:

- **GEMSAM**:
  Contact: OnLine Center–Americas, Network Products and Services (NP&S)
  Telephone: 1–800–321–7937

NOTE: Press [1] for the Online Center. Follow the phone tree instructions to select X–Ray modality. When prompted, select the option for obtaining an IP address.

- **GEMSE**:
  Use the new mail form called *INSFORM.xls* or *INSFORM.txt* for obtaining an IP Address.
  If you have questions or need clarification regarding the use of this form, do not hesitate to ask the Operation support OnLine.
  Contact: OnLine Center–Europe
  Telephone: +33 (0)1 30 83 13 00
  FAX: +33 (0)1 30 70 99 70

NOTE: The INSITE FORM is on the formatted sheet (.xls) or text sheet (.txt) that can be found on the Sevice CD–Rom.

- **GEMSA**:
  Contact: OnLine Center–Asia
  Network Products and Services (NP&S)
  Telephone: (81) 426 56 0033
  FAX: (81) 426 56 0053

This page left intentionally blank.

Chapter 9 Seismic Calculations

1 Server Access

Seismic requirements are determined and specified by the hospital architect of record and may require approval by the specific state or country agency.

Seismic calculations (per California Building Code) applicable to the product can be found at the following address:

http://gehcseismic.com/docs/index-cardiac_vascular.htm

Please contact your Installation Specialist for questions related to the Seismic Calculations.

NOTE: Seismic attachment hardware shown on seismic calculations may differ from hardware supplied with system. Any additional hardware that is required will be the responsibility of the institution and/or their contractor.

This page left intentionally blank.

© 2008 General Electric Company.
GE Medical Systems, a General Electric Company, going to market as GE Healthcare.
283, rue de la Minière
78530, Buc
FRANCE

www.gehealthcare.com